Part 2

Assembly Instructions

Train Module

850_415

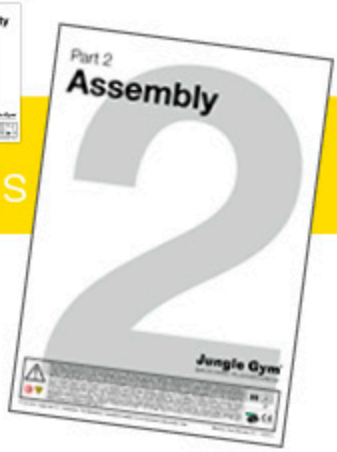

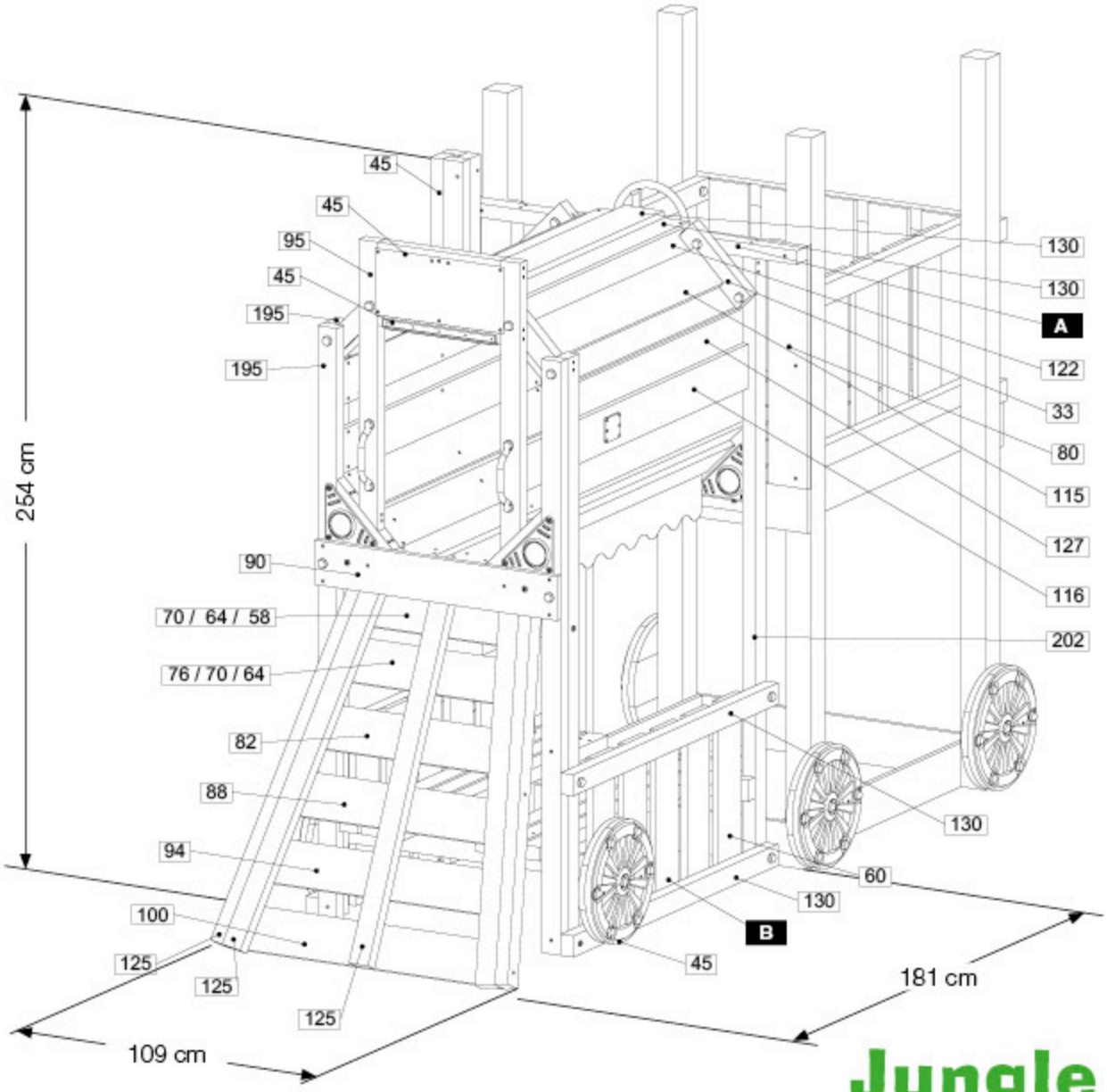

Jungle Gym®
BACKYARD PLAYGROUNDS

EN. Warnings. Only for domestic use. Maximum number of users is 6. **DE.** Achtung. Nur für den Hausgebrauch. Maximale Benutzerzahl 6. **FR.** Attention. Réservé à un usage privé. Le nombre maximal d'utilisateurs est de 6. **NL.** Waarschuwingen. Uitsluitend voor huishoudelijk gebruik. Het maximale aantal gebruikers is 6. **BG.** Внимание. За употреба само в домашни условия. Максималният брой потребители е 6. **CS.** Varování. Jen pro domácí použití. Maximální počet uživatelů je 6. **DA.** Advarsler. Kun til privat brug. Maksimum antal brugere er 6. **EL.** Προειδοποιήσεις. Μόνο για οικιακή χρήση. Μέγιστος αριθμός χρηστών 6. **ES.** Advertencias. Sólo para uso doméstico. Número máximo de usuarios: 6. **ET.** Hoiatused. Ainult kodusaks kasutamiseks. Maksimaalne kasutajate arv on 6. **FI.** Varoitukset. Ainoastaan kotikäyttöön. Käyttäjiä yhteensä enintään 6. **HR.** Upozorenja. Samo za kućansku uporabu. Maksimalan broj korisnika je 6. **HU.** Figyelmeztetések. Csak otthoni használatra A használók max. száma: 6. **IS.** Varnaðarorð. Eingöngu fyrir einkanotkun Í heimahúsum og á einkalóðum. Hámarksfjöldi notenda er 6. **IT.** Avvertenze. Solo per uso domestico. Massimo numero di utenti è 6. **LT.** Įspėjimai. Tik buitiniam naudojimui. Maksimalus naudotojų skaičius 6. **LV.** Brīdinājumi. Izmantot tikai mājās. Maksimālais lietotāju skaits ir 6. **NO.** Advarsler. Kun for privat bruk. Maksimalt antall brukere er 6. **PL.** Ostrzeżenia. Wyłącznie do użytku domowego. Maksymalna liczba użytkowników to 6. **PT.** Avisos. Apenas para uso doméstico. O número máximo de utilizadores é 6. **RO.** Avertismente. Numai pentru uz domestic. Numărul maxim de utilizatori este 6. **RU.** Предостережения. Только для домашнего использования. Максимальное количество пользователей - 6. **SK.** Upozornenia. Iba na domáce použitie. Maximálne množstvo osôb je 6. **SL.** Opozorila. Samo za domačo uporabo. Maksimalno število uporabnikov je 6. **SR.** Upozorenja. Samo za kućnu upotrebu. Maksimalan broj korisnika je 6. **SV.** Varningar. Endast för hemmabruk. Det maximala antalet användare är 6. **TR.** Uyarılar. Sadece ev kullanımı için. Maksimum kullanıcı sayısı 6.

3h

™ & © 2020 Jungle Gym B.V. Amsterdam, The Netherlands. Copyrighted material. Do not reproduce under penalty of law.

Content Kit Train Module

450_415

Hardware Train Module

100_128

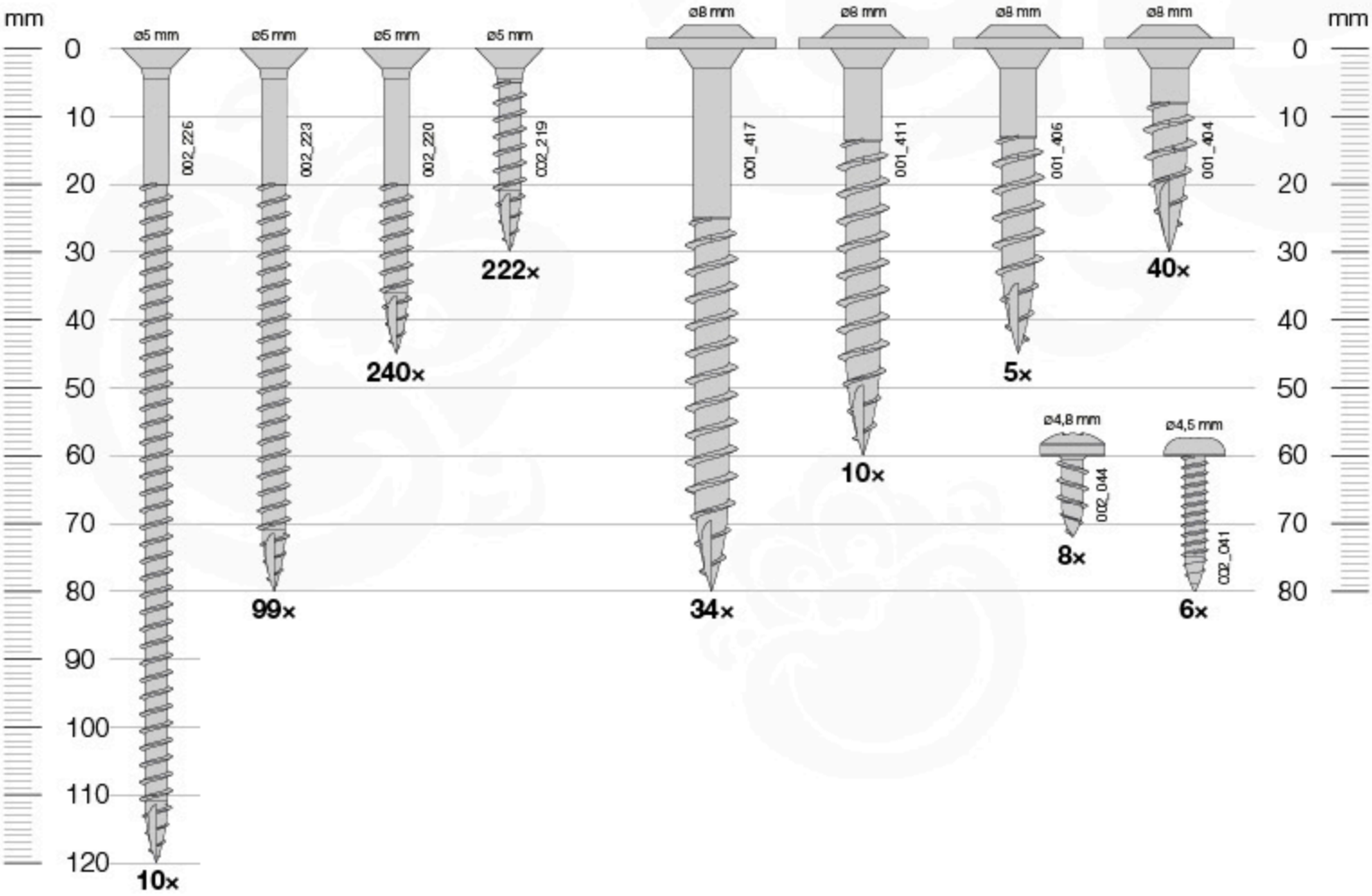

www.junglegym.com - © 2020 Jungle Gym B.V.

Timber Train Module

650_415

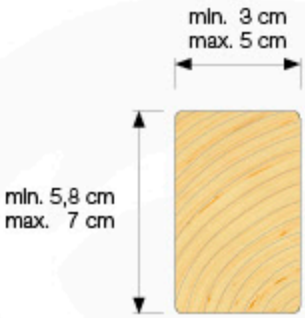

min. 200 cm max. 202 cm	202	p.10/11	2×
min. 194 cm max. 195 cm	195		4×
min. 129 cm max. 130 cm	130		10×
min. 124 cm max. 125 cm	125		5×
min. 120 cm max. 124 cm	124	p.14	2×
min. 94 cm max. 95 cm	95	p.22	2×
min. 86 cm max. 90 cm	90	p.11+19	2×
min. 79 cm max. 80 cm	80		3×
min. 72 cm max. 78 cm	78	p.15	1×
min. 44 cm max. 45 cm	45		6×
min. 33 cm max. 34 cm	34	p.19+21	4×
min. 32 cm max. 33 cm	33		2×
min. 31 cm max. 32 cm	32	p.21	2×
min. 30 cm max. 31 cm	31	p.19	2×
min. 22 cm max. 23 cm	23		5×

© 2020 Jungle Gym B.V. - www.junglegym.com

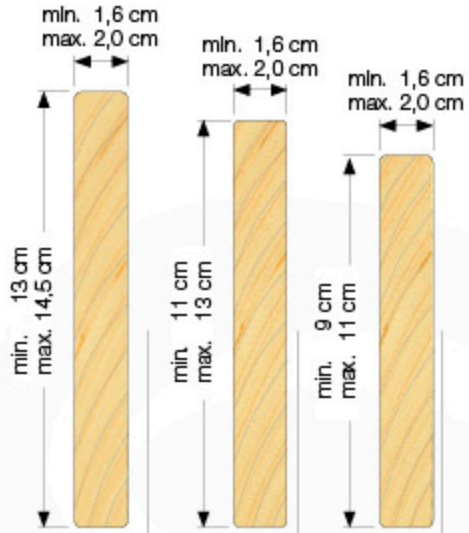

min. 159 cm max. 160 cm — 160		1×	2×	2×
min. 129 cm max. 130 cm — 130		5×	8×	8×
min. 125 cm max. 127 cm — 127	p.20+25	8×	12×	12×
min. 118 cm max. 122 cm — 122	p.24	4×	6×	6×
min. 115 cm max. 121 cm — 121	p.26	2×	4×	4×
min. 111 cm max. 116 cm — 116	p.27	2×	4×	4×
min. 108 cm max. 115 cm — 115	p27	2×	4×	4×
min. 99 cm max. 100 cm — 100	p.28	1×	1×	1×
min. 92 cm max. 94 cm — 94	p.29	1×	1×	1×
min. 86 cm max. 90 cm — 90	p.19	1×	1×	1×
min. 84 cm max. 88 cm — 88	p.29	1×	1×	1×
min. 76 cm max. 82 cm — 82	p.29	1×	1×	1×
min. 79 cm max. 80 cm — 80		6×	8×	10×
min. 68 cm max. 76 cm — 76	p.29	1×	1×	1×
min. 60 cm max. 70 cm — 70	p.29	1×	1×	1×
min. 52 cm max. 64 cm — 64	p.29	0×	1×	1×
min. 57 cm max. 61 cm — 61	p.25	2×	4×	4×
min. 59 cm max. 60 cm — 60		7×	8×	8×
min. 44 cm max. 58 cm — 58	p.30	0×	0×	1×
min. 44 cm max. 45 cm — 45		48×	48×	60×

www.junglegym.com - © 2020 Jungle Gym B.V.

1a

1b

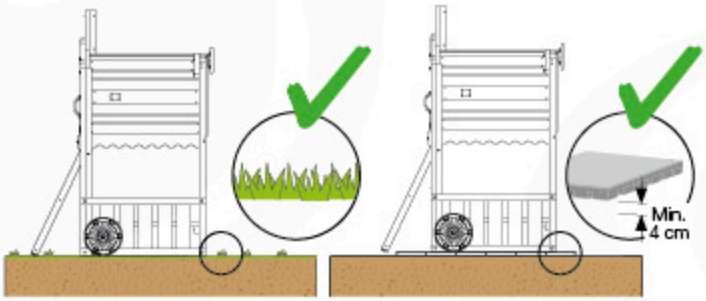

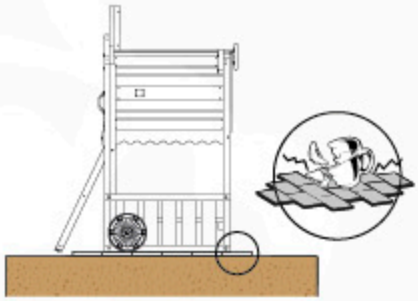

1c

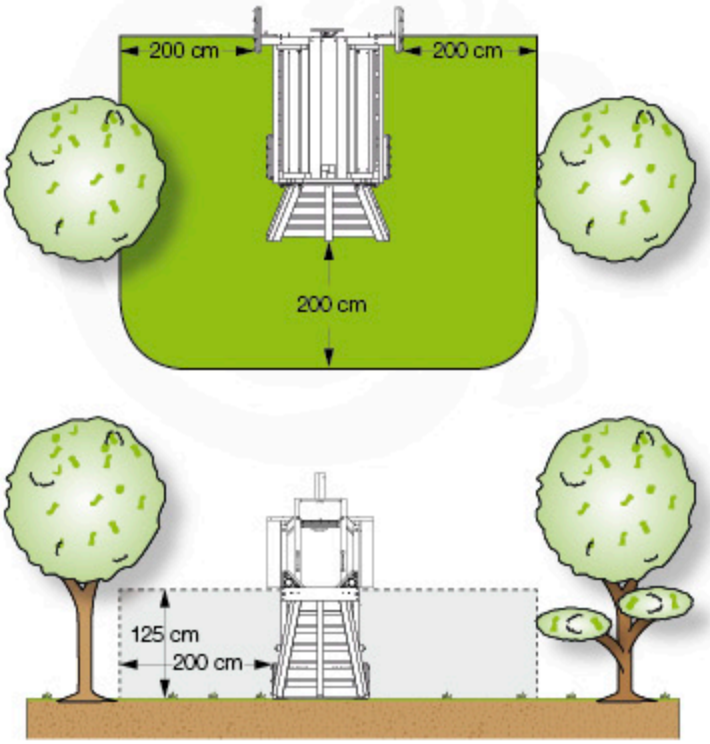

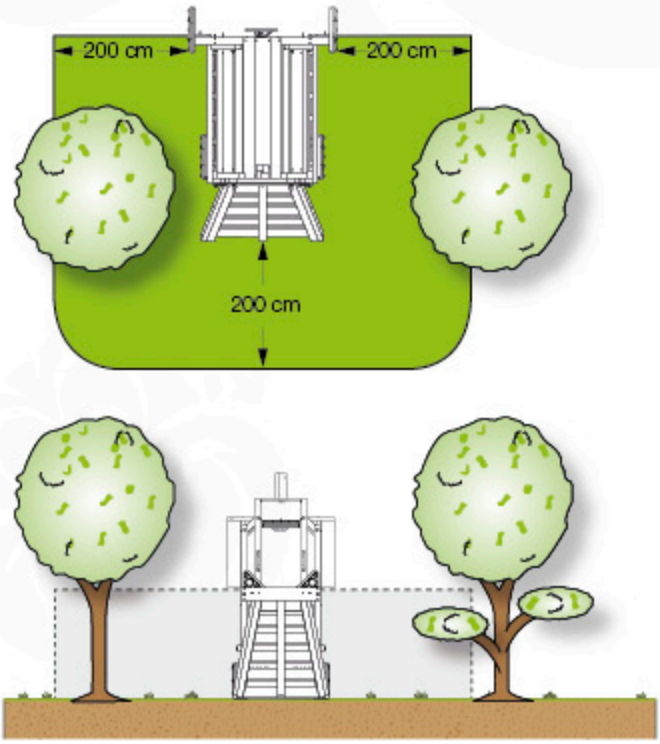

2 Playground Planner Train Module

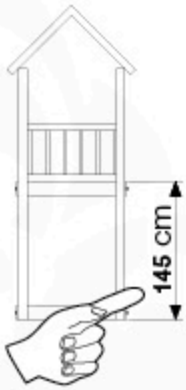

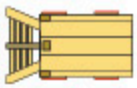

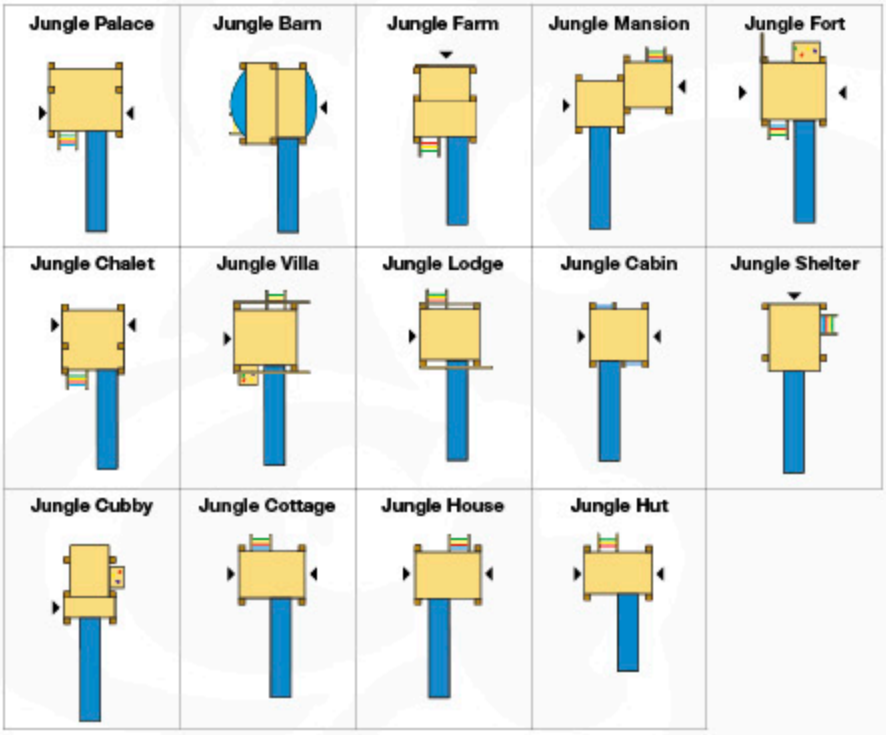

2'

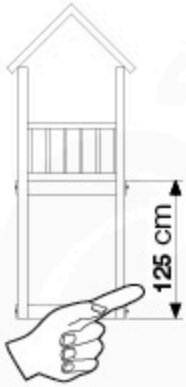

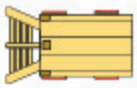

2''

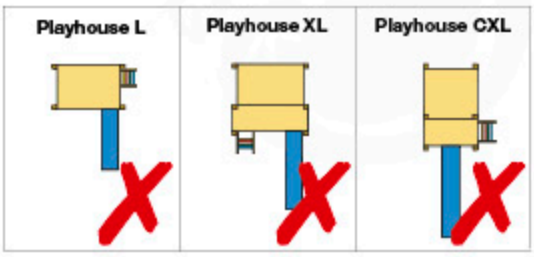

www.junglegym.com - © 2020 Jungle Gym B.V.

3a

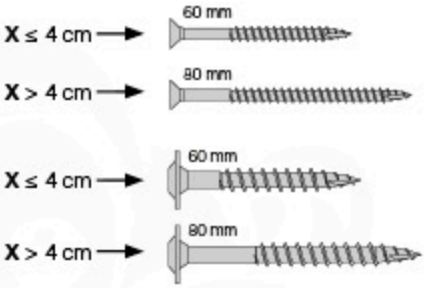

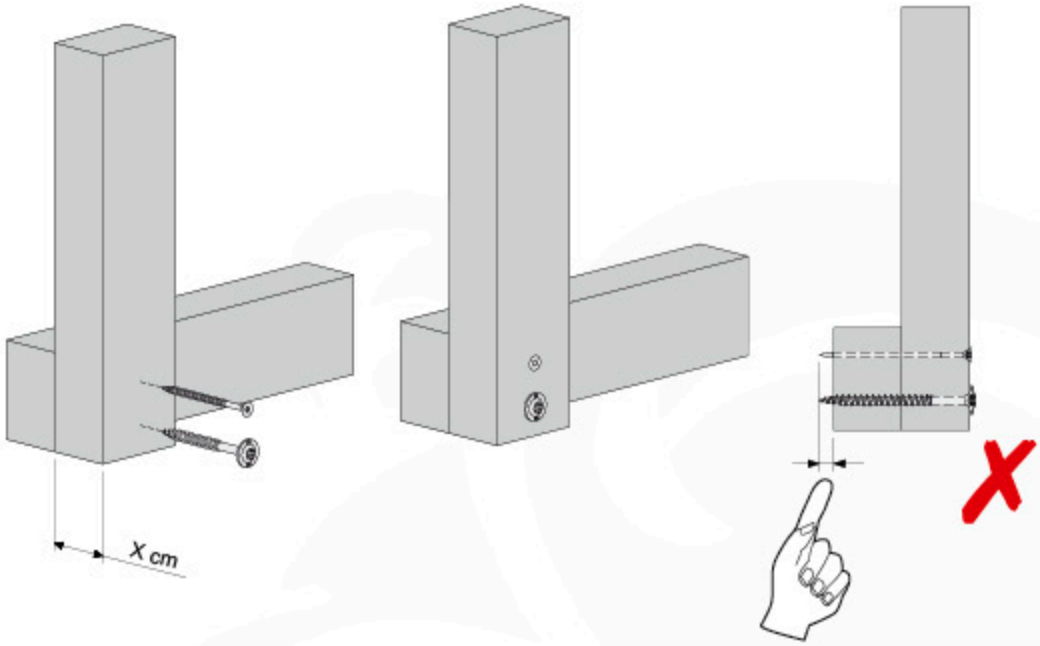

3b

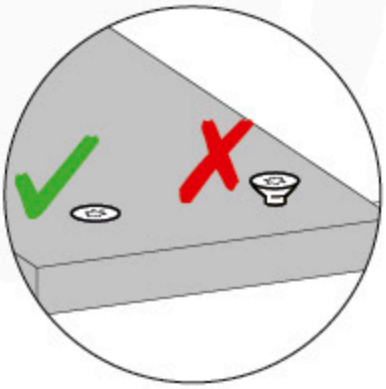

4

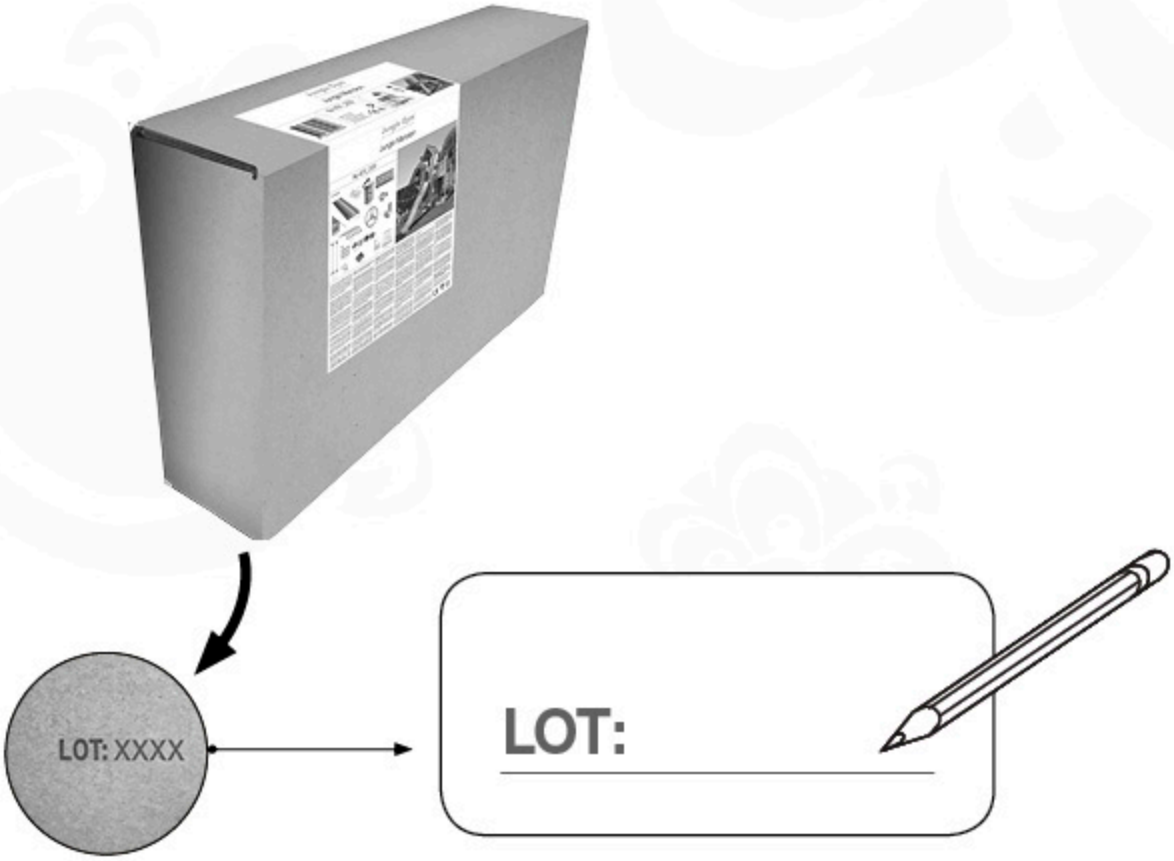

5

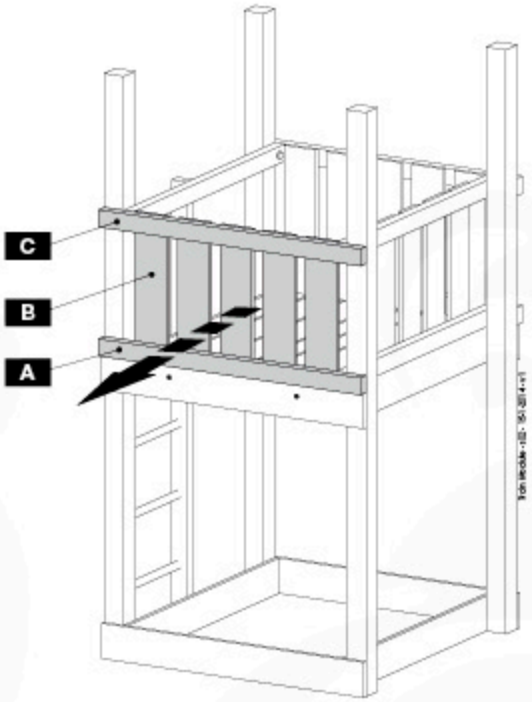

A → 6b 9

B → 8a+13 p.12+18

C → 19' 24

6a

	125 cm
Farm	•
House	•
Hut	•
Home	•
Casa	•
Club	•
Castle	•
Tower	•

6× 002_220 — 45 mm

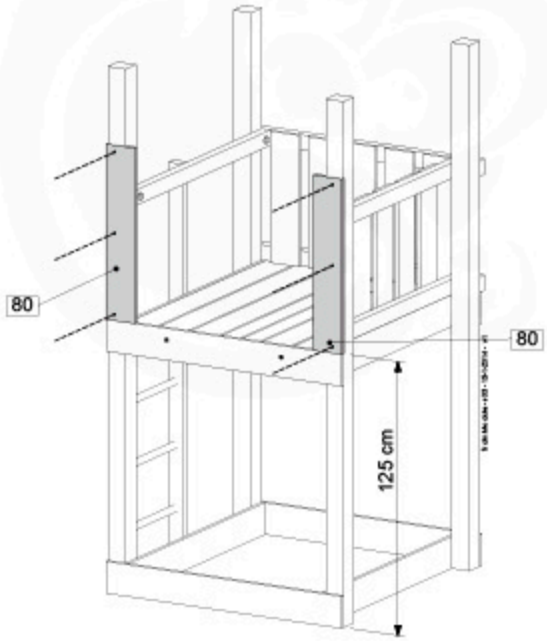

6a'

	145 cm
Palace	•
Farm	•
Fort	•
Villa	•
Cabin	•
Cottage	•
Barn	•
Mansion	•
Chalet	•
Lodge	•
Shelter	•
Cubby	•

14× 002_220 — 45 mm

2× 001_417 — 80 mm

2× 001_411 — 60 mm

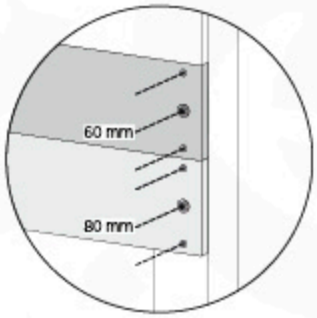

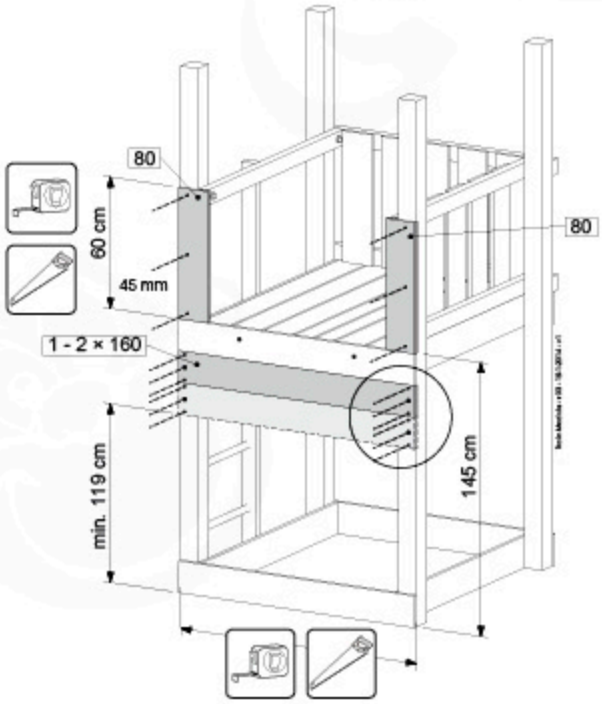

www.junglegym.com - © 2020 Jungle Gym B.V.

6b

2× 002_226 — 120 mm

2× 002_220 — 45 mm

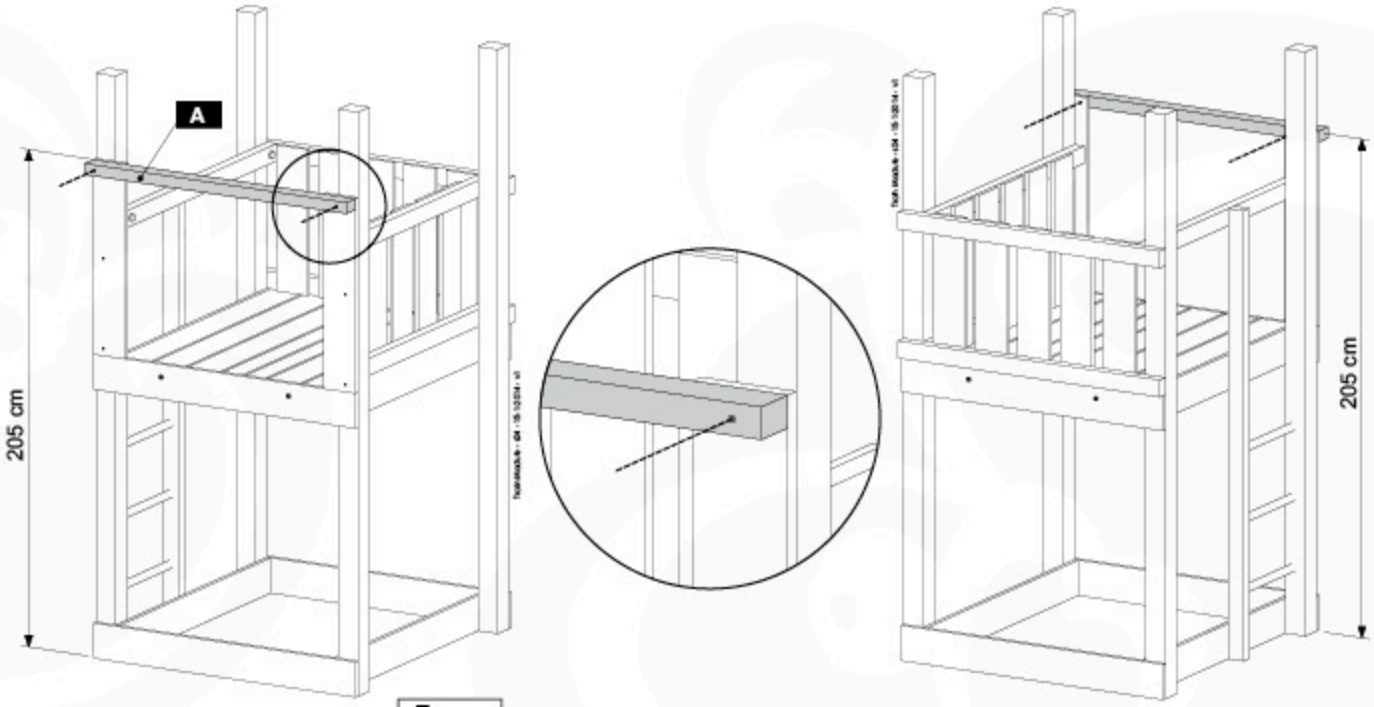

A → 5 / 8

6c

3× 002_223 — 80 mm

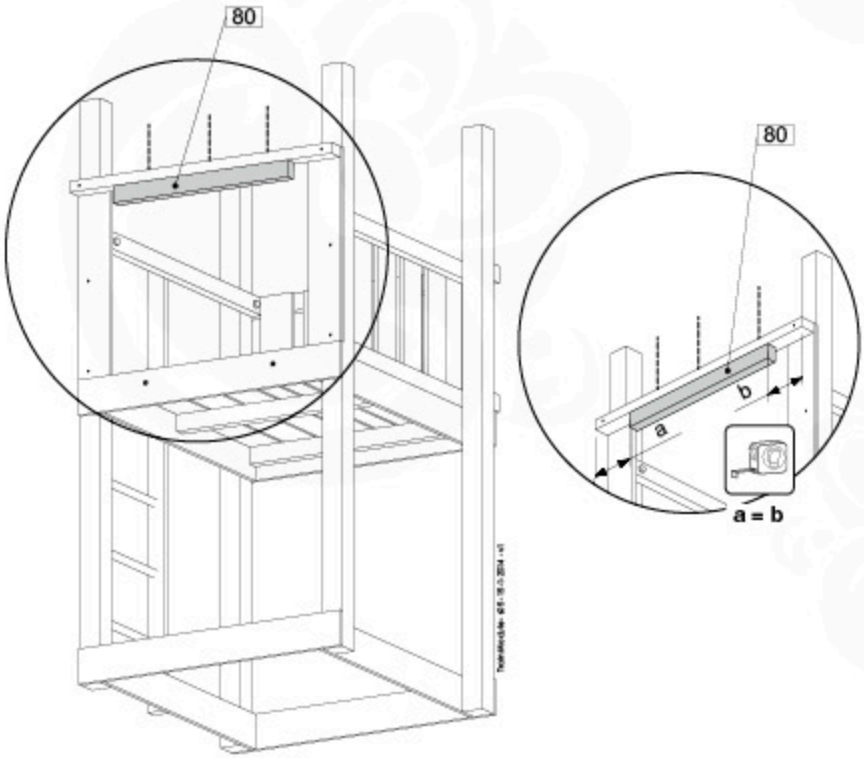

6d

Palace	Lodge
Farm 125	Shelter
Fort	House
Cabin	Hut
Cottage	Home
Barn	Casa
Mansion	Club
Chalet	Castle

→ 6e / 10

Farm 145
Villa

→ 6e' / 10

Tower
Cubby

→ 6e" / 11

© 2020 Jungle Gym B.V. - www.junglegym.com

6e

8x 002_223 — 80 mm

8x 002_220 — 45 mm

Palace	Lodge
Farm 125	Shelter
Fort	House
Cabin	Hut
Cottage	Home
Barn	Casa
Mansion	Club
Chalet	Castle

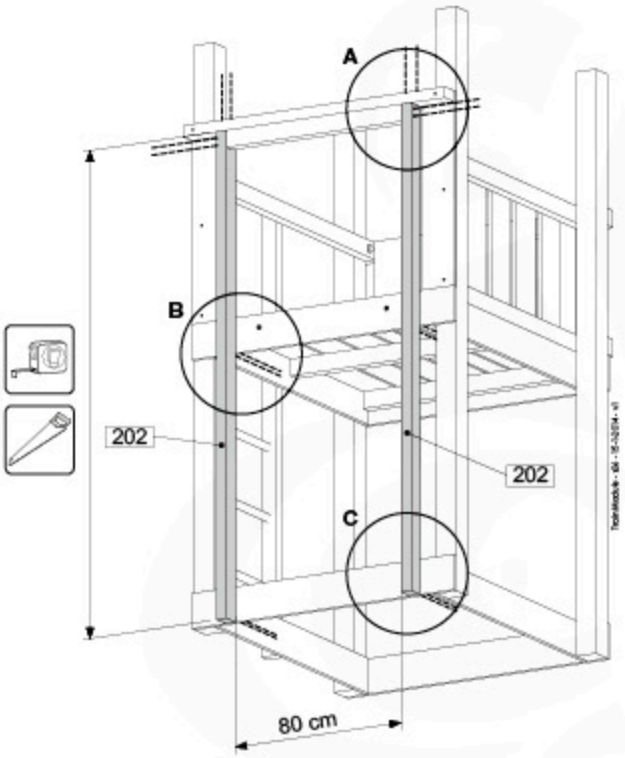

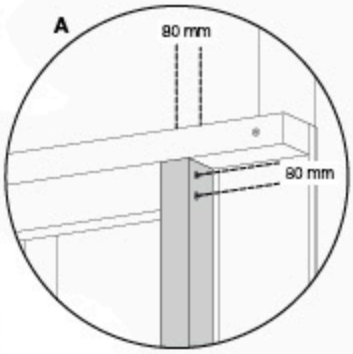

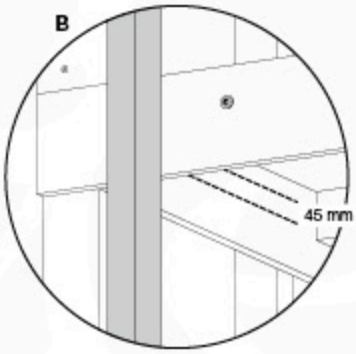

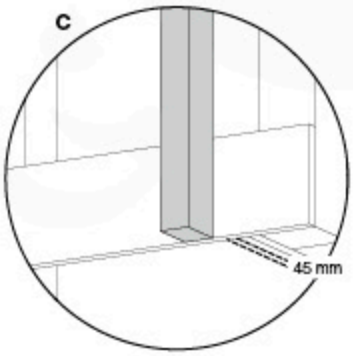

6e'

8x 002_223 — 80 mm

8x 002_220 — 45 mm

Farm 145
Villa

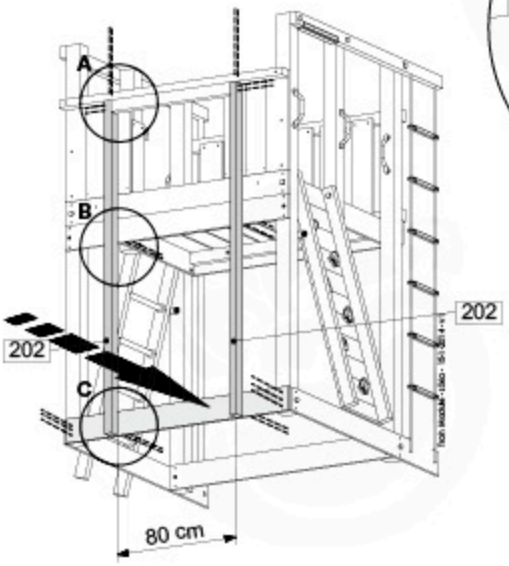

www.junglegym.com - © 2020 Jungle Gym B.V.

6e”

4x 002_223

Tower
Cubby

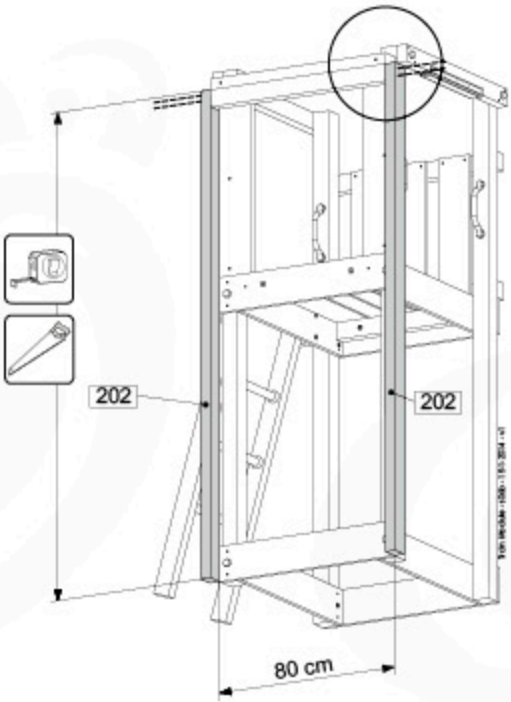

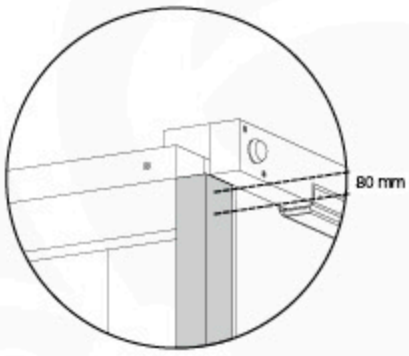

7

2x 001_417

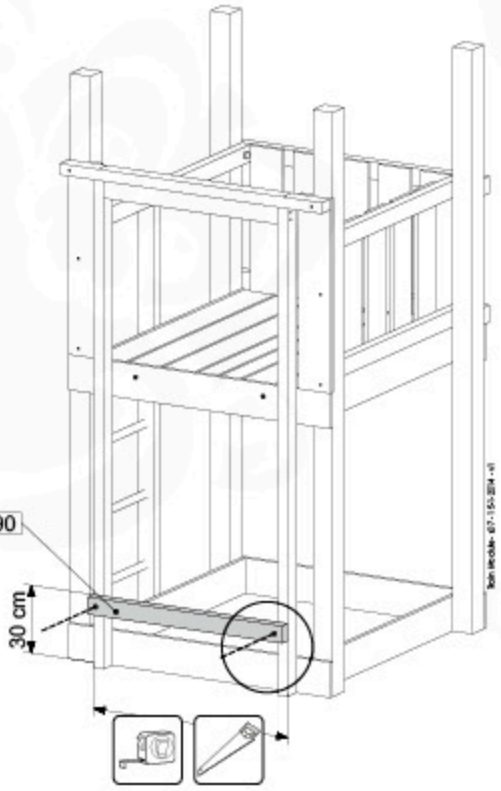

Tower

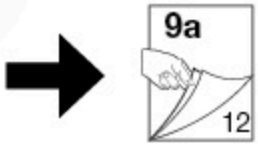

8a

4× 002_220 — 45 mm

2× 002_219 — 30 mm

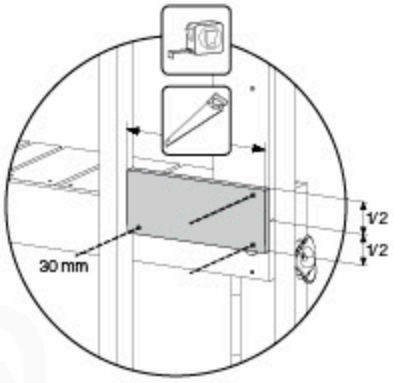

8b

0 - 12× 002_220 — 45 mm

0 - 12× 002_219 — 30 mm

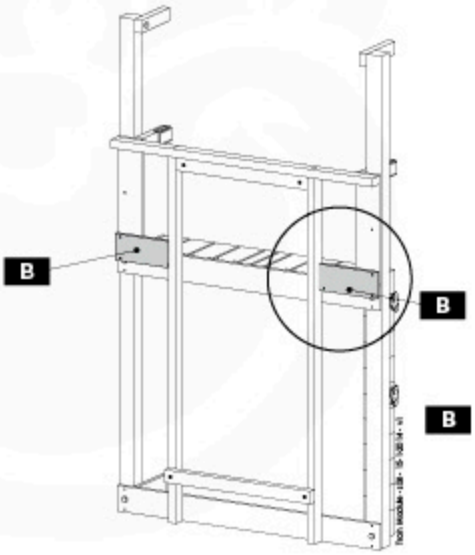

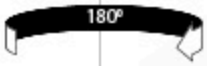

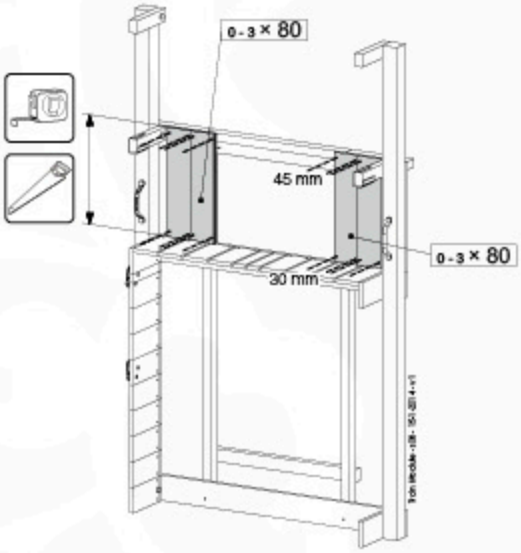

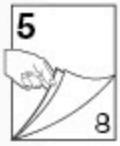

9a

2× 001_417 120_005 — 80 mm, ø5 mm

6× 002_223 — 80 mm

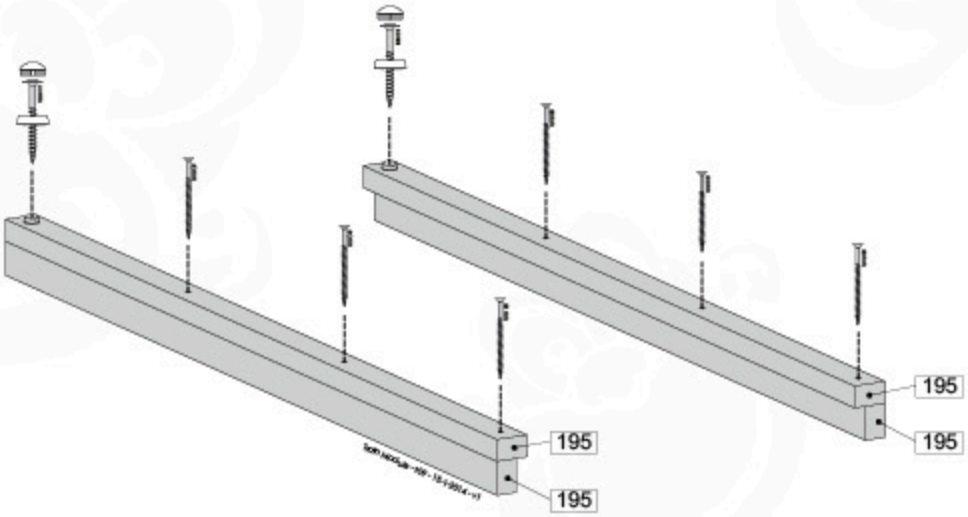

www.junglegym.com - © 2020 Jungle Gym B.V.

9b

4x 002_220

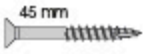

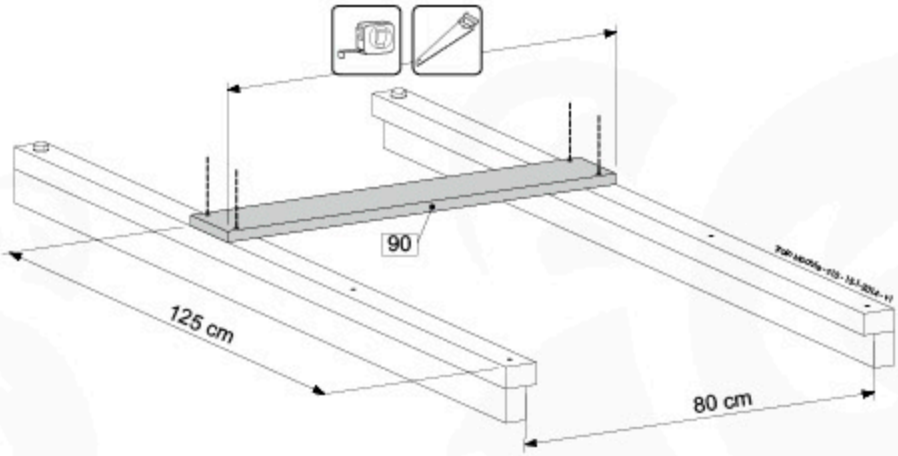

9c

2x 001_417 120_005

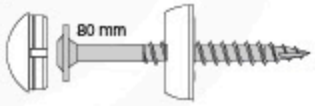

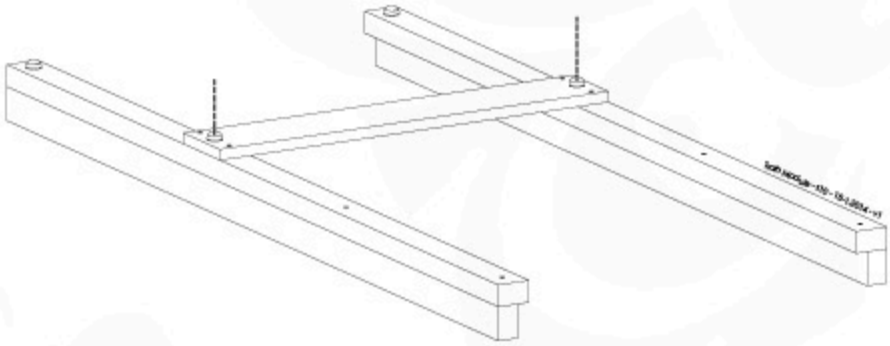

9d

2x 001_417

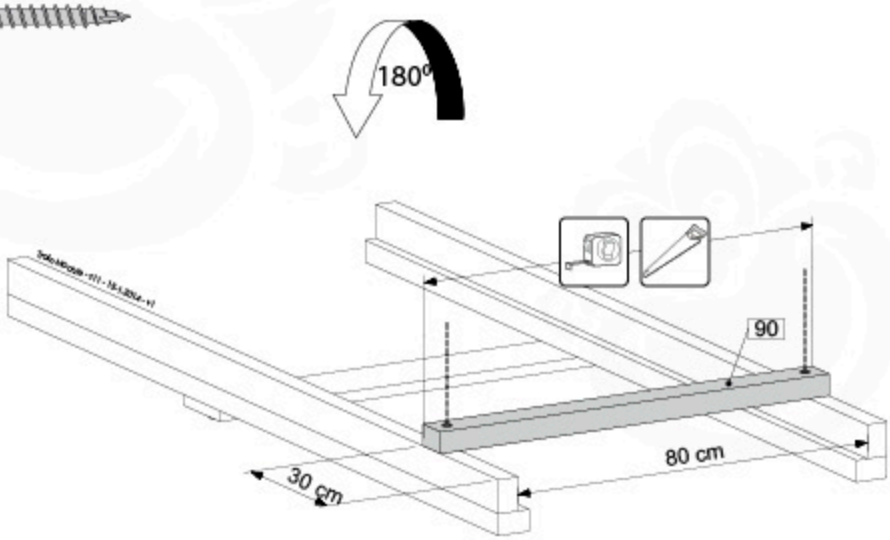

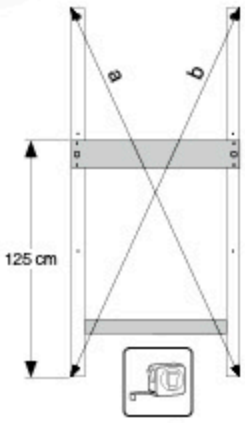

a = b

10

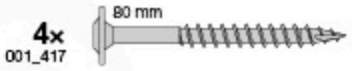

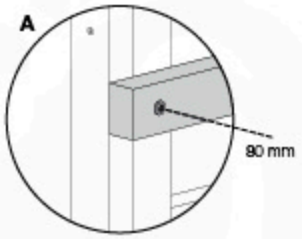

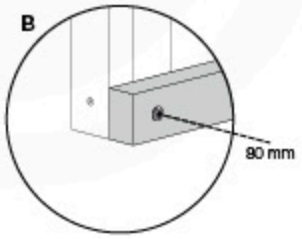

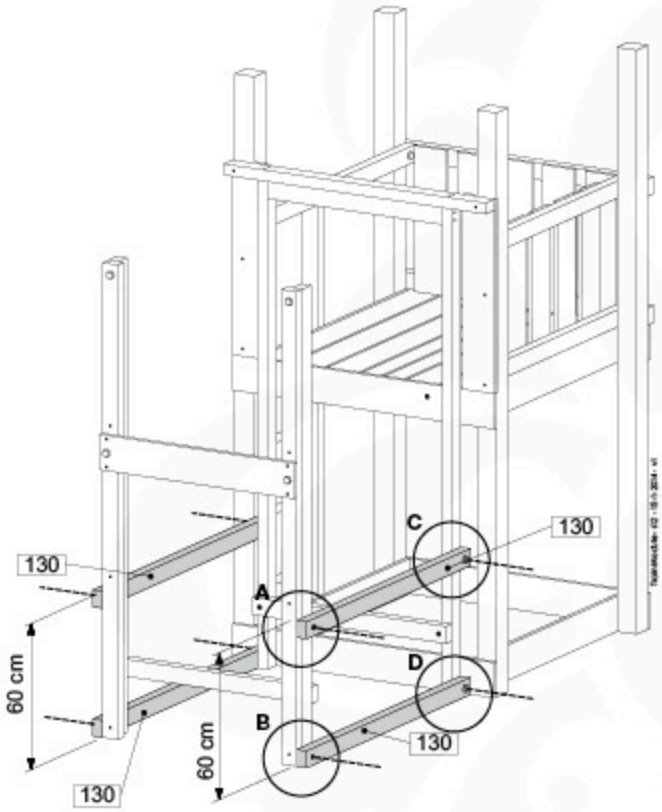

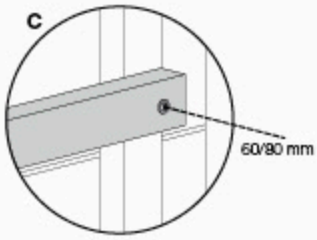

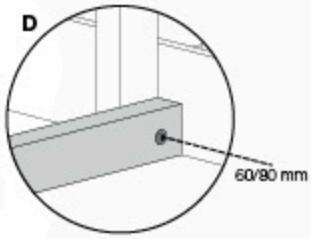

11a

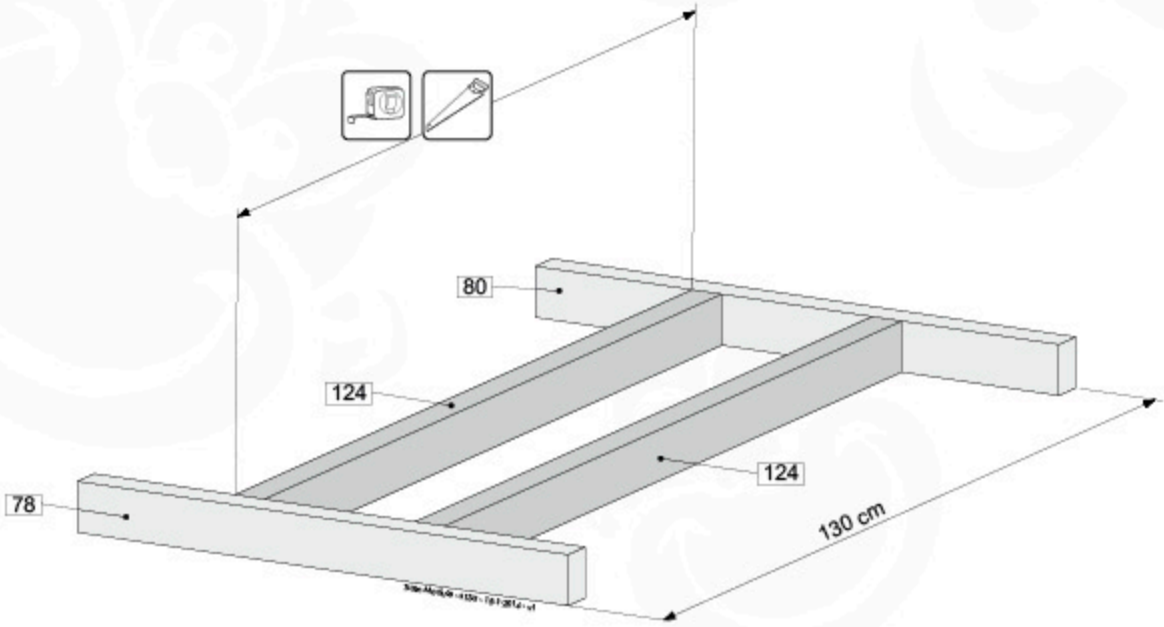

www.junglegym.com - © 2020 Jungle Gym B.V.

11b

4×
002_223

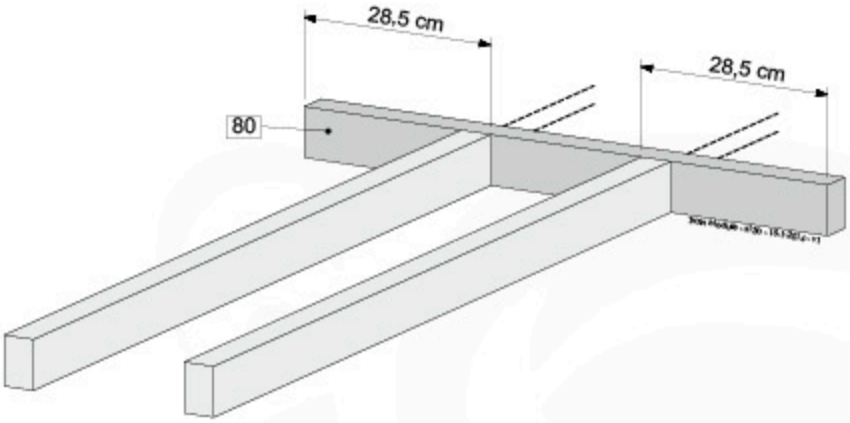

11c

4×
002_223

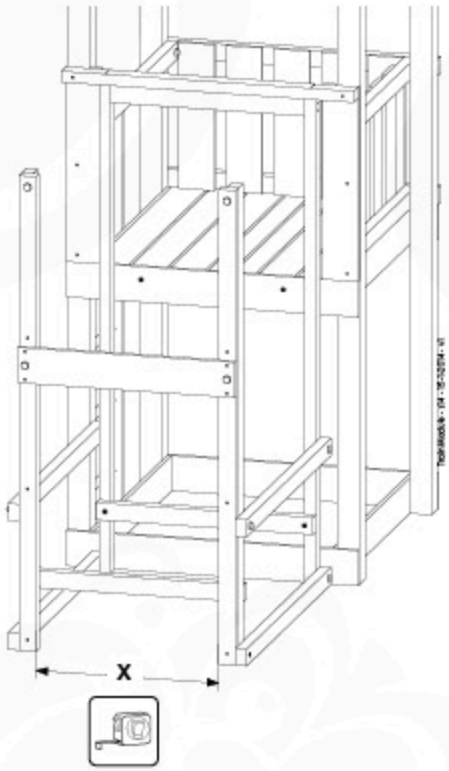

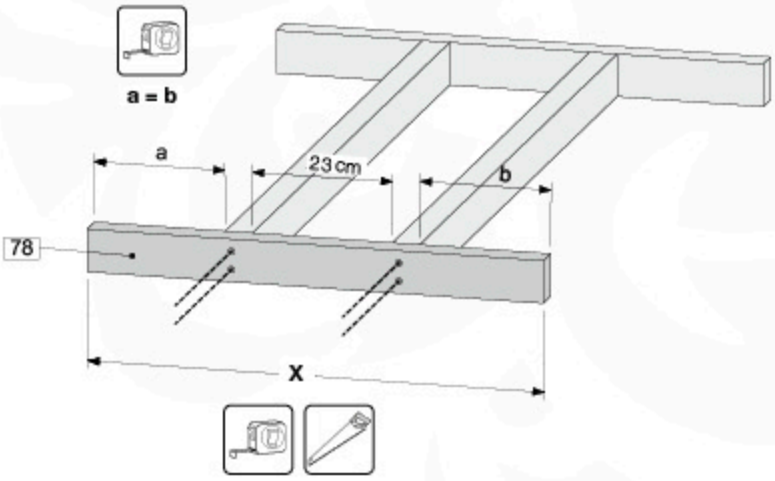

11d

4×
002_223

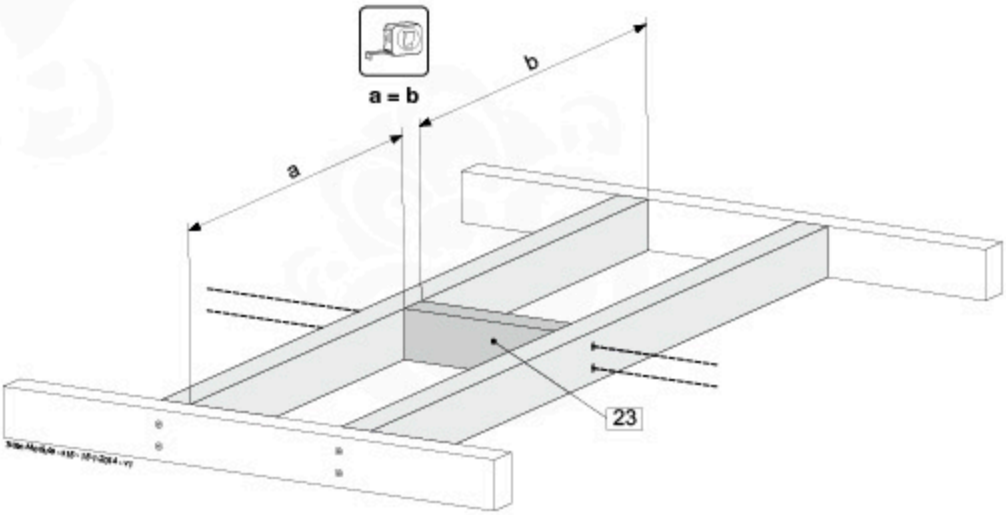

© 2020 Jungle Gym B.V. - www.junglegym.com

11e

	125 cm
Farm	•
House	•
Hut	•
Home	•
Casa	•
Club	•
Castle	•
Tower	•

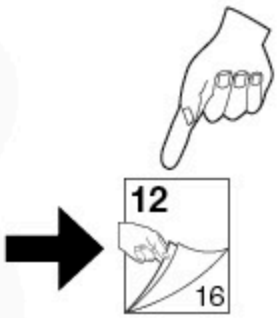

	145 cm
Palace	•
Farm	•
Fort	•
Villa	•
Cabin	•
Cottage	•
Barn	•
Mansion	•
Chalet	•
Lodge	•
Shelter	•
Cubby	•

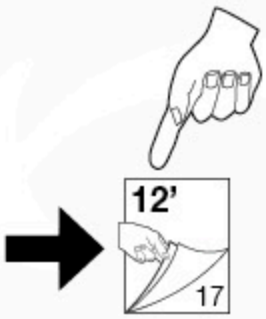

12

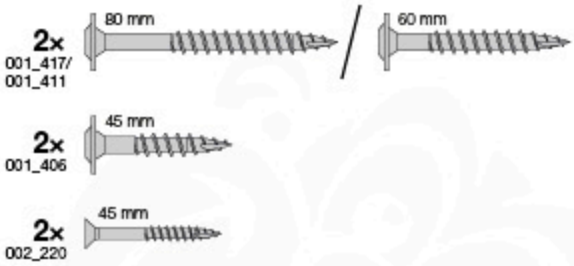

	125 cm
Farm	•
House	•
Hut	•
Home	•
Casa	•
Club	•
Castle	•
Tower	•

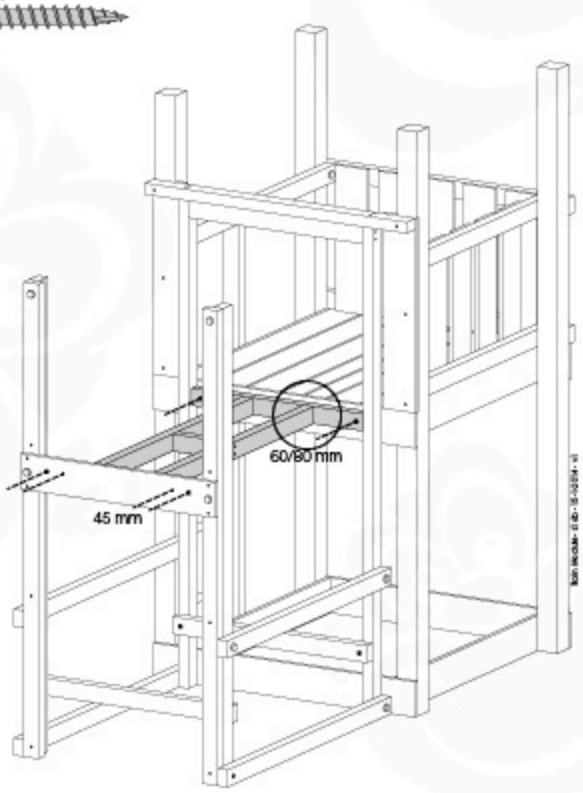

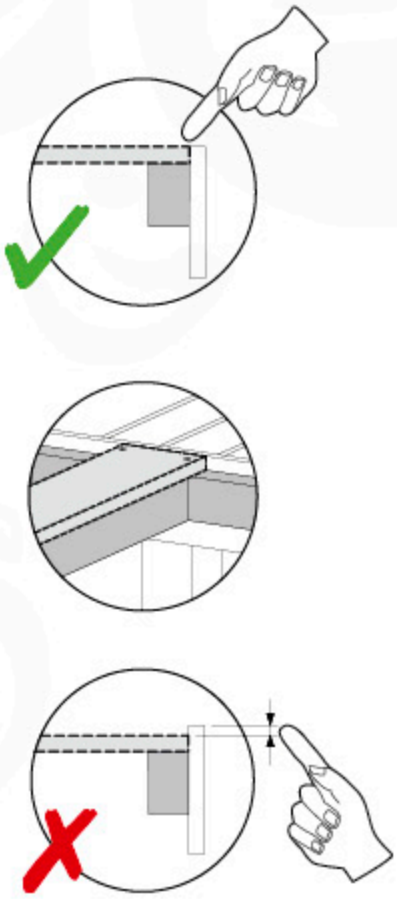

www.junglegym.com - © 2020 Jungle Gym B.V.

12’

4x 001_406

4x 002_220

	145 cm
Palace	•
Farm	•
Fort	•
Villa	•
Cabin	•
Cottage	•
Barn	•
Mansion	•
Chalet	•
Lodge	•
Shelter	•
Cubby	•

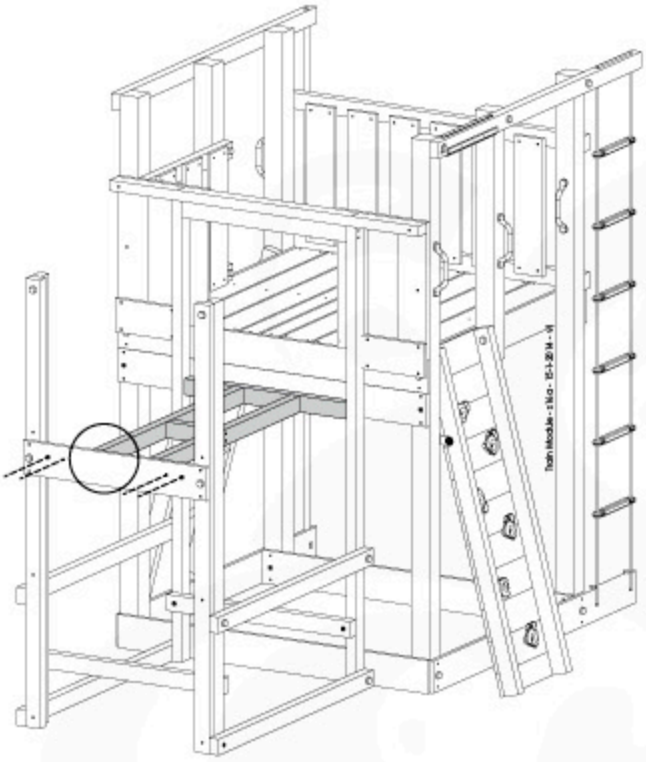

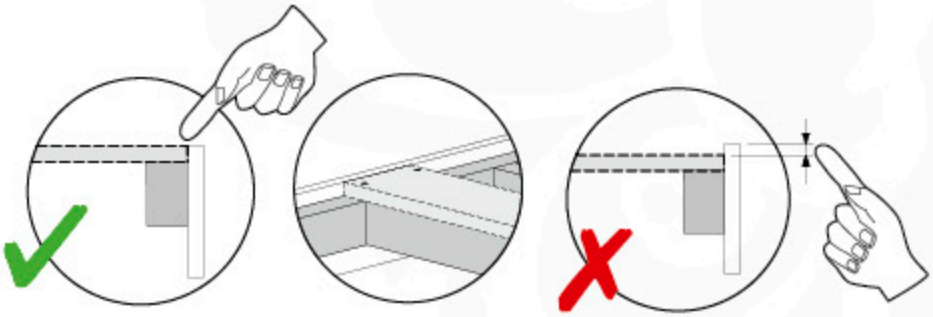

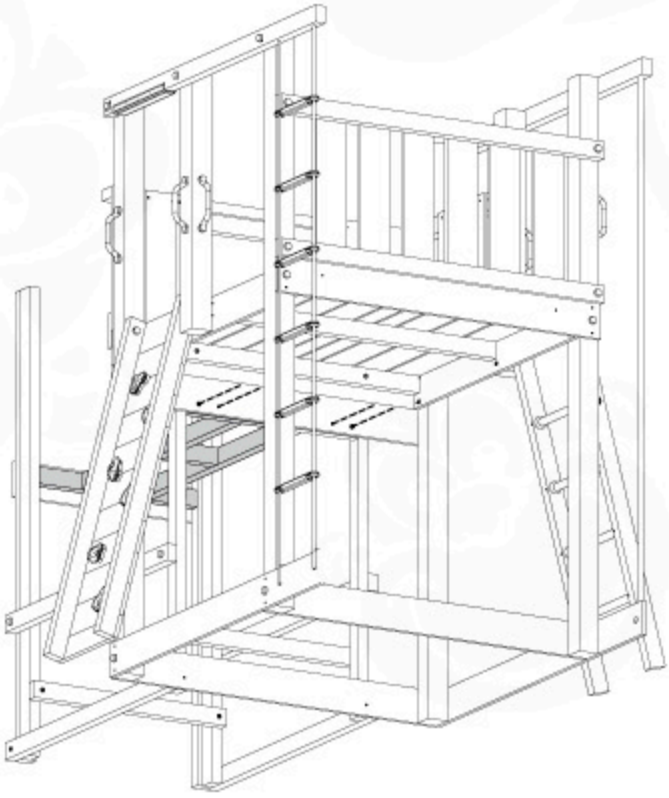

13

40 - 48× 002_220

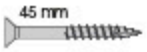

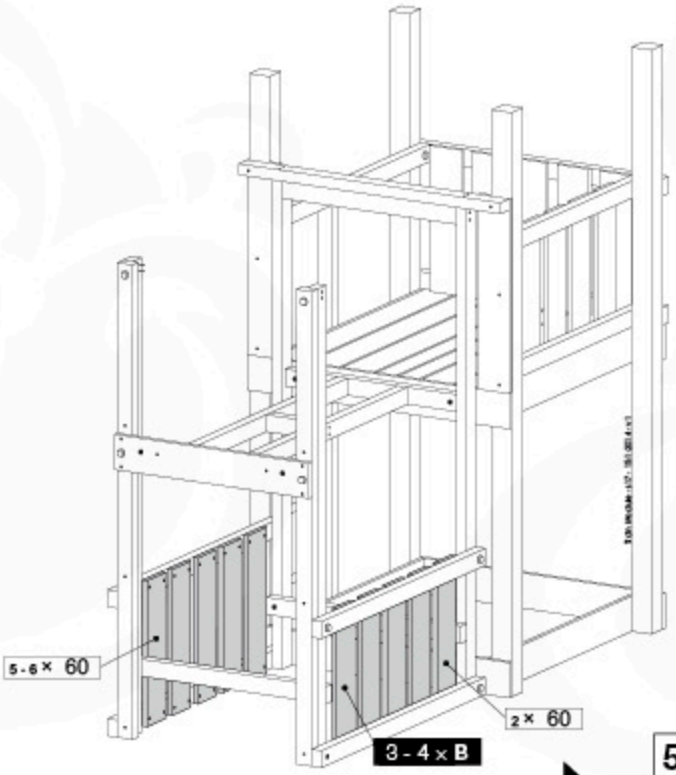

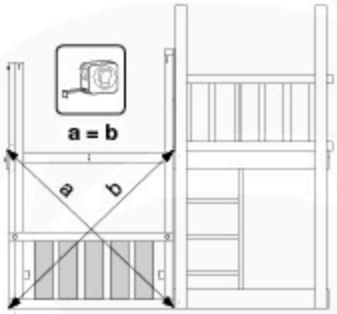

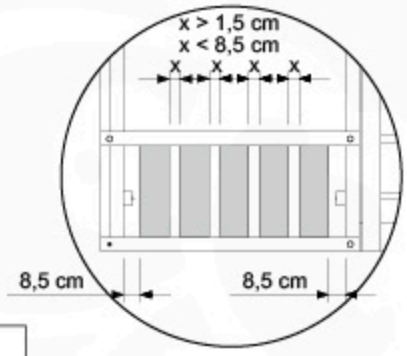

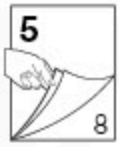

14

8 - 12× 002_220

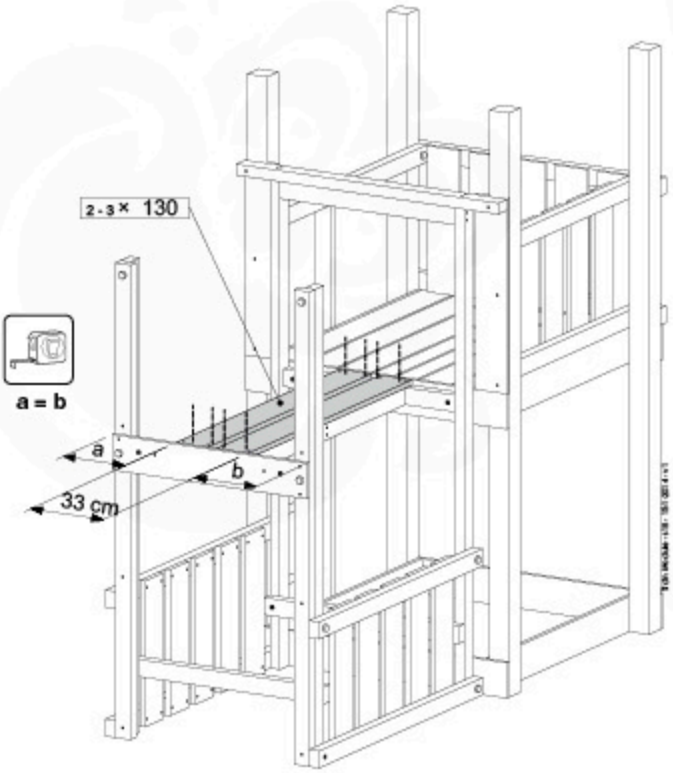

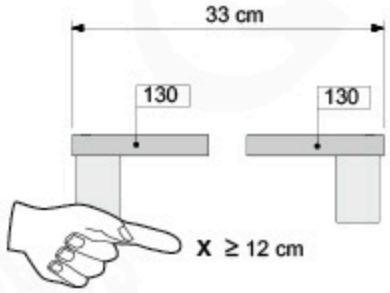

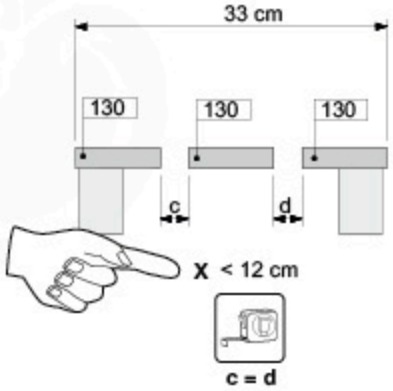

www.junglegym.com - © 2020 Jungle Gym B.V.

15a

4x
002_223

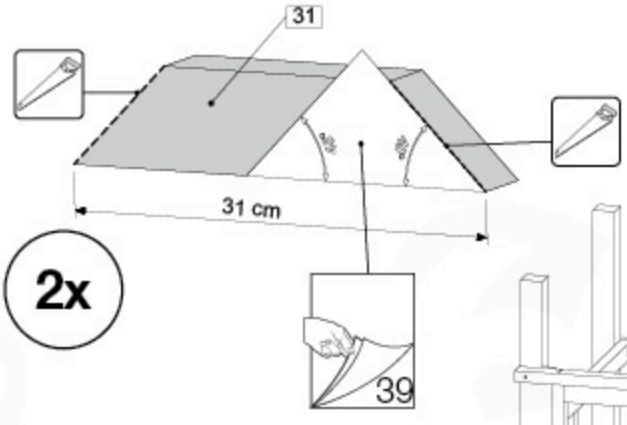

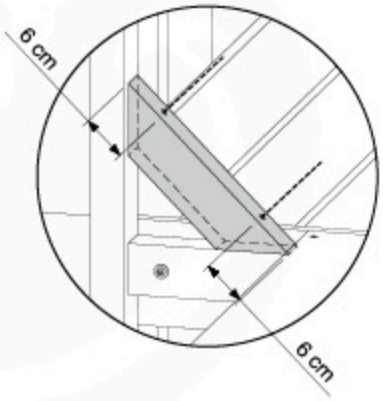

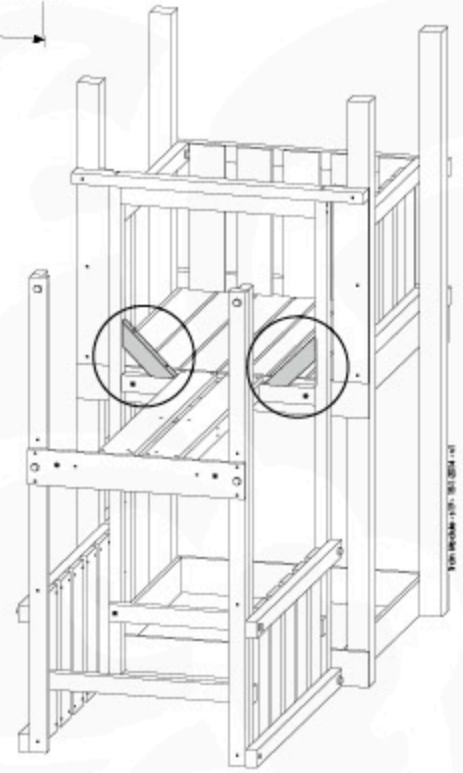

15b

2x
001_411/
001_417

2x
002_223

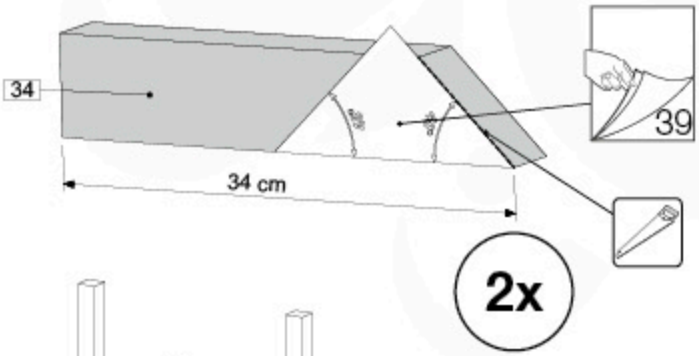

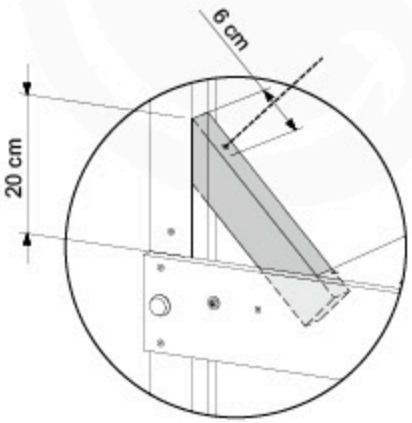

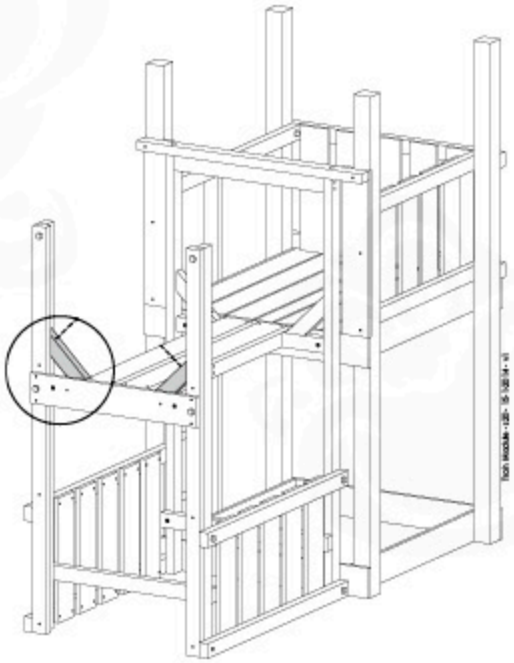

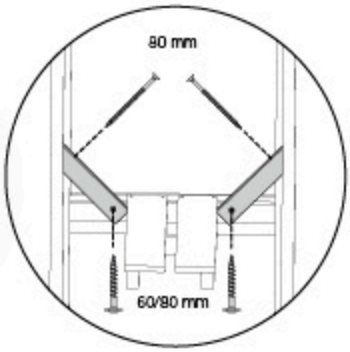

16

16 - 24x
002_220

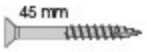

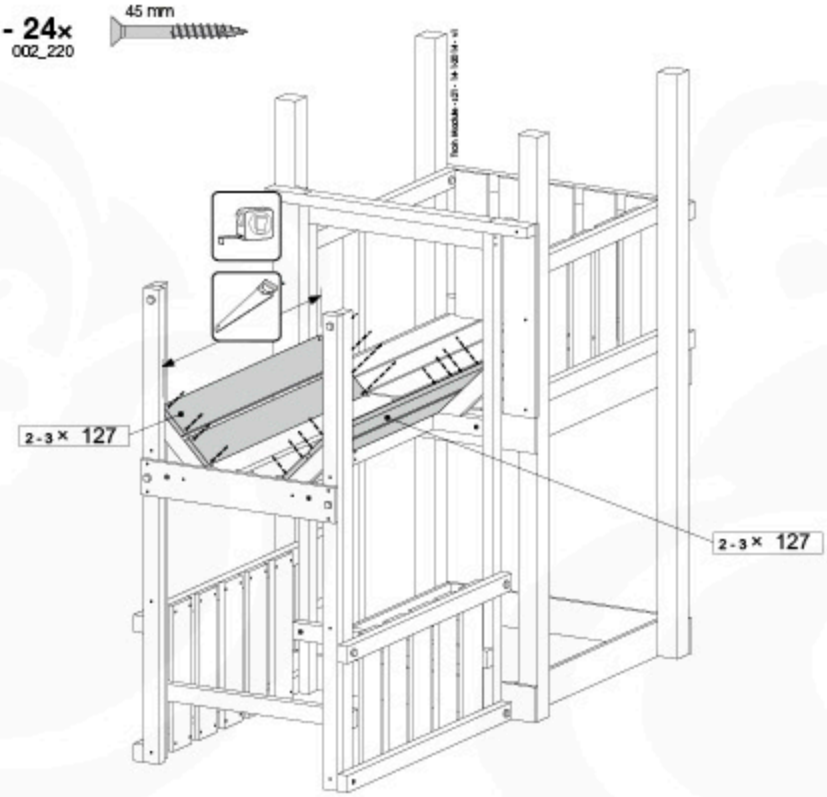

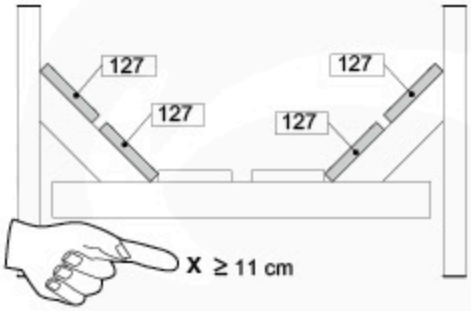

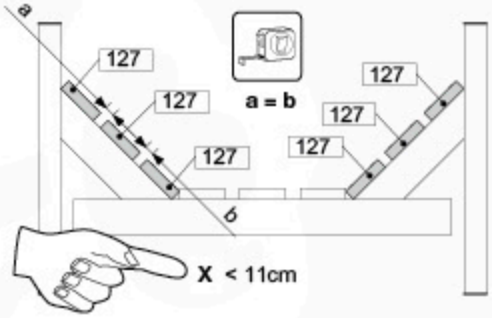

17a

4x
001_417
120_005

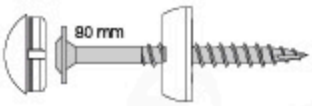

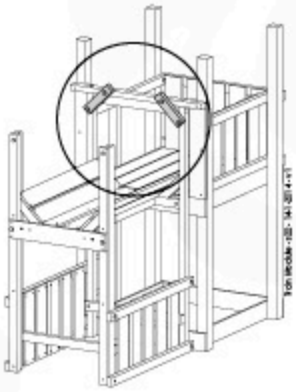

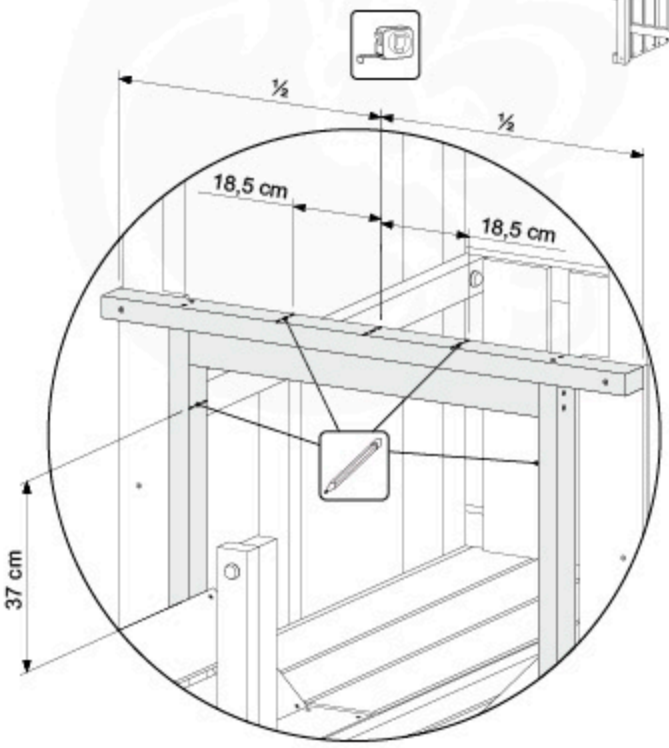

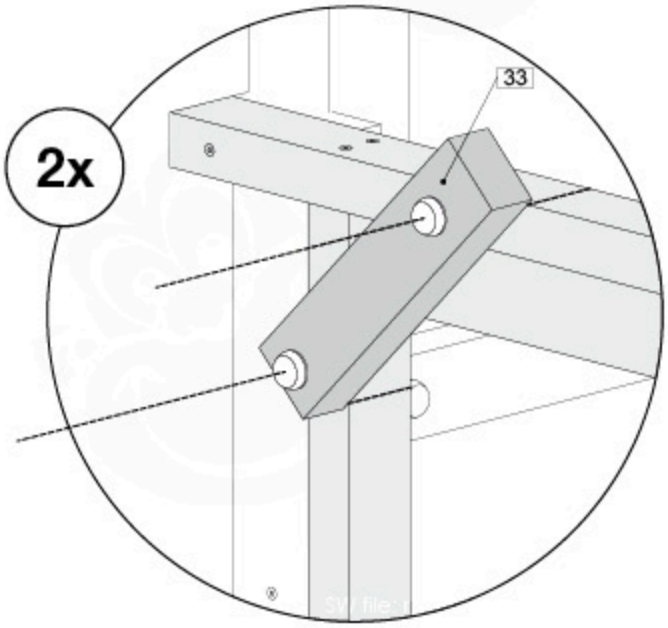

17b

8x
002_223

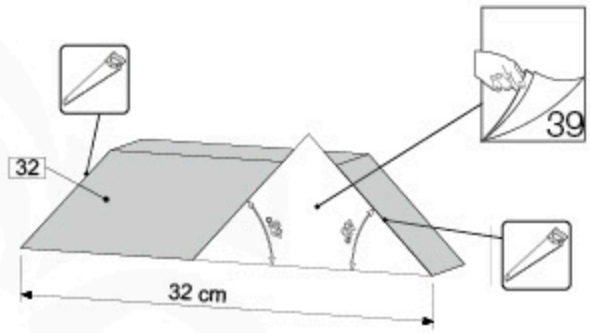

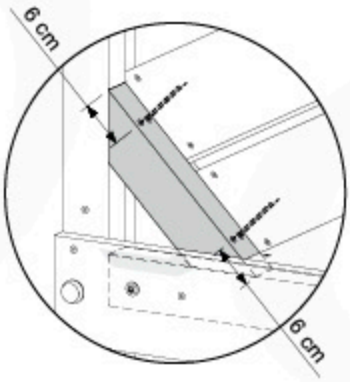

2x

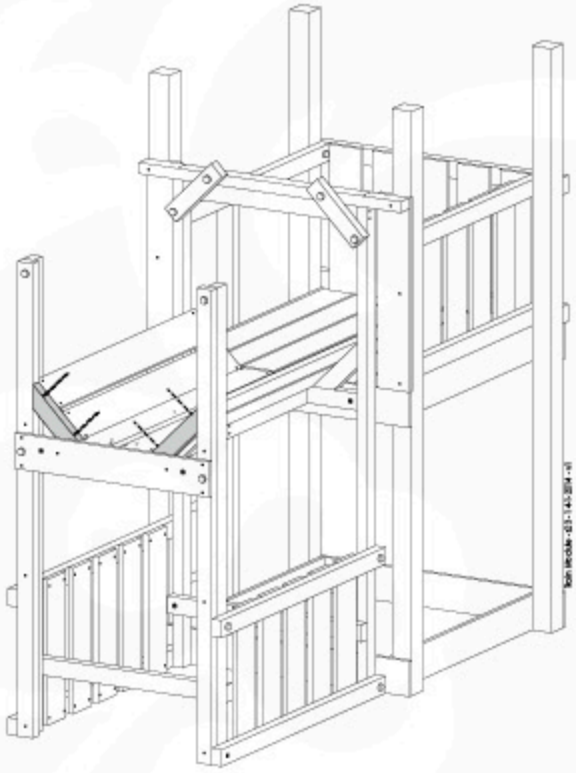

17c

4x
002_223

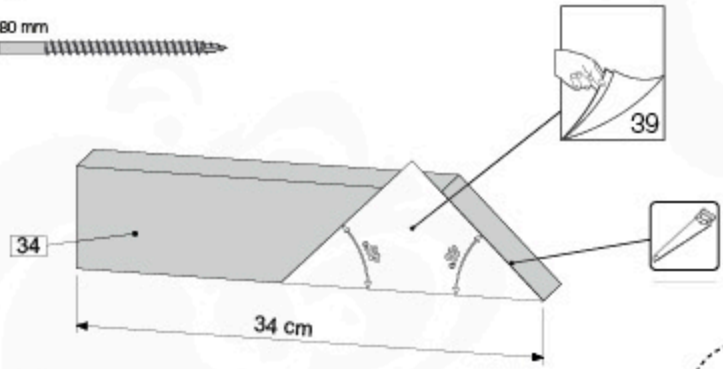

2x

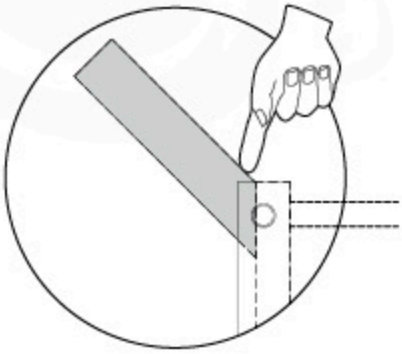

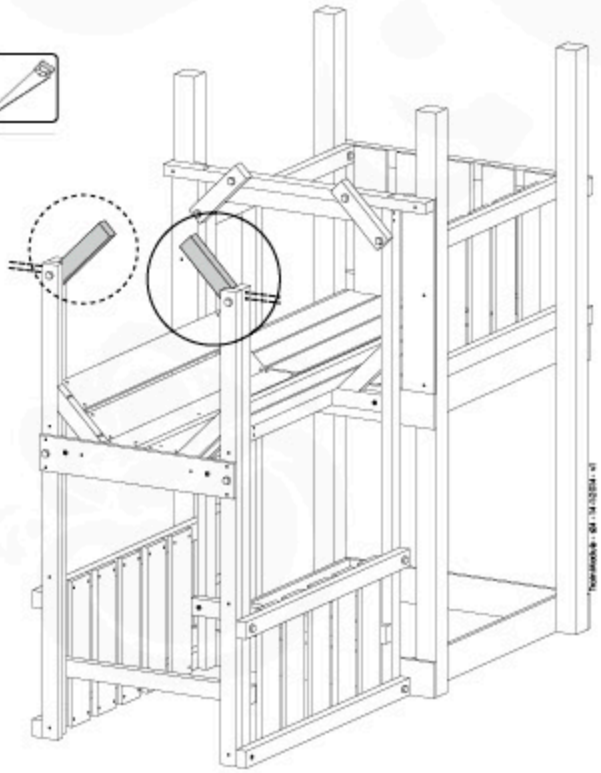

18a

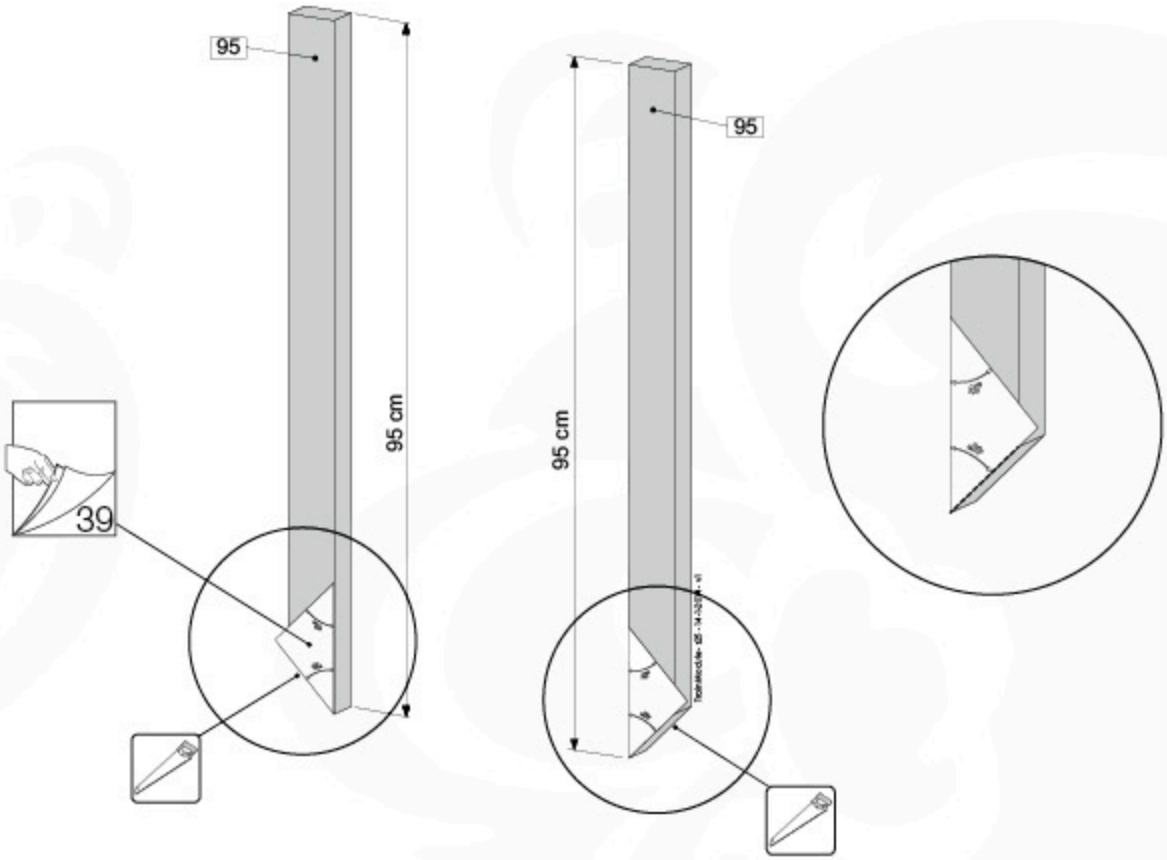

18b

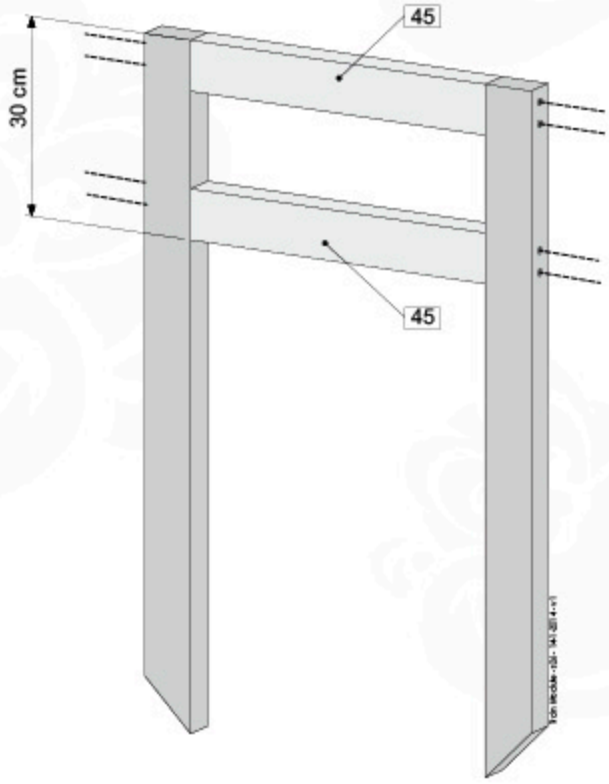

18c

2x
001_411/
001_417
120_005

4x
002_223

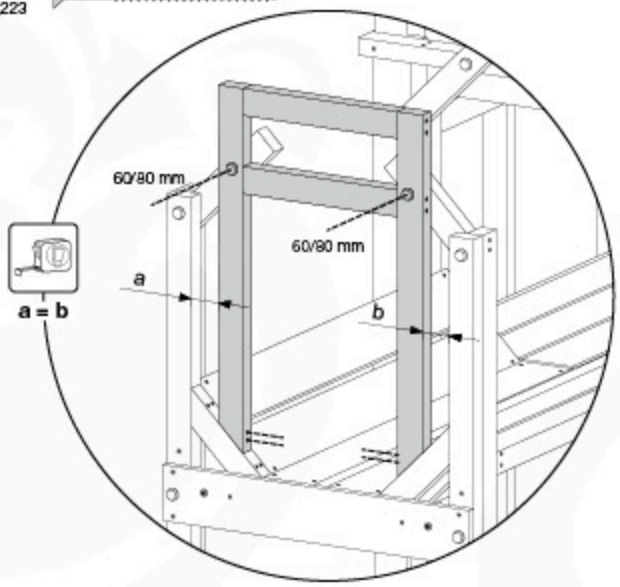

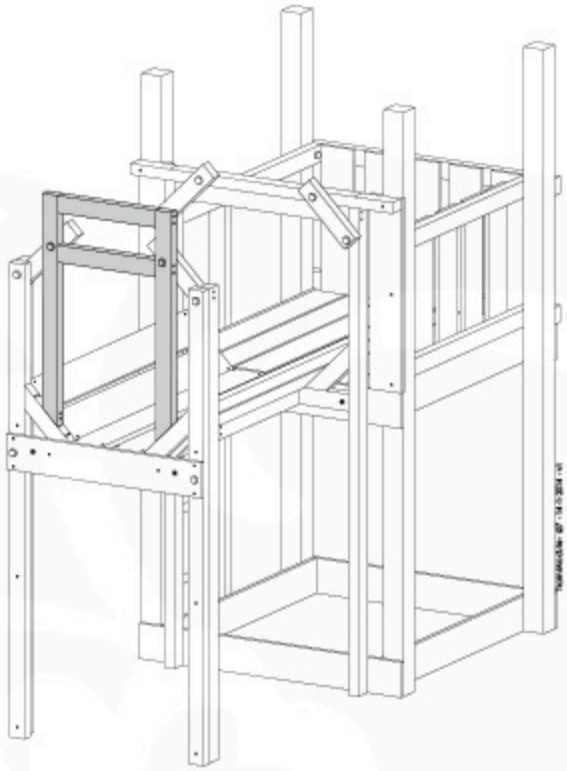

19

Villa

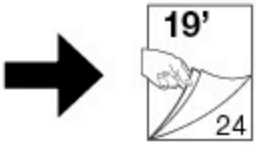

8 - 12x
002_220

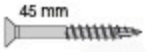

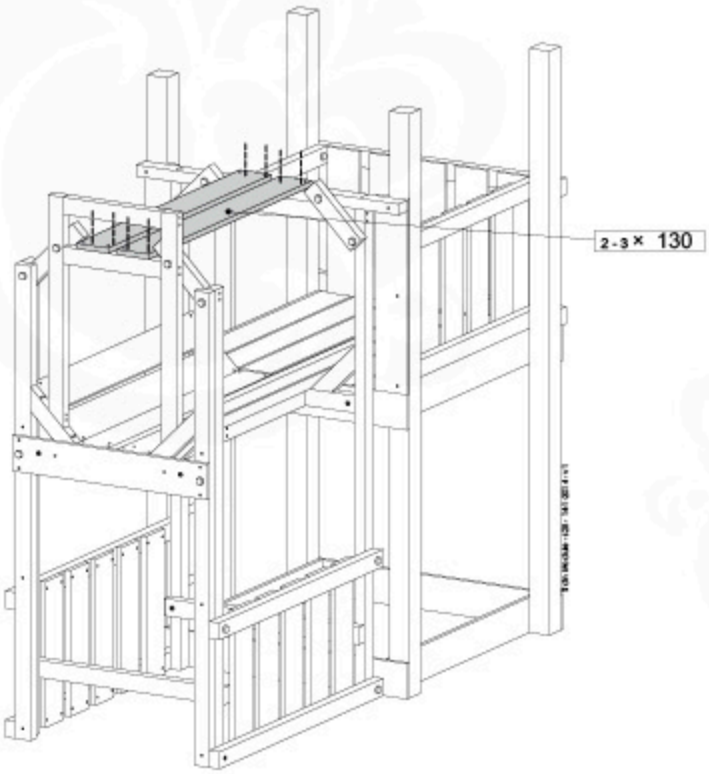

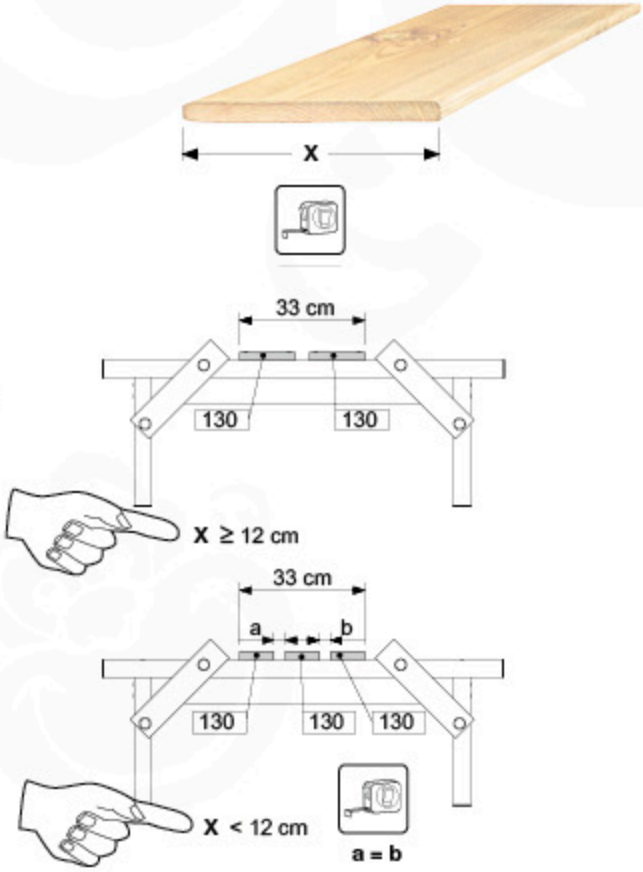

19’

Villa

8 - 12× 45 mm
002_220

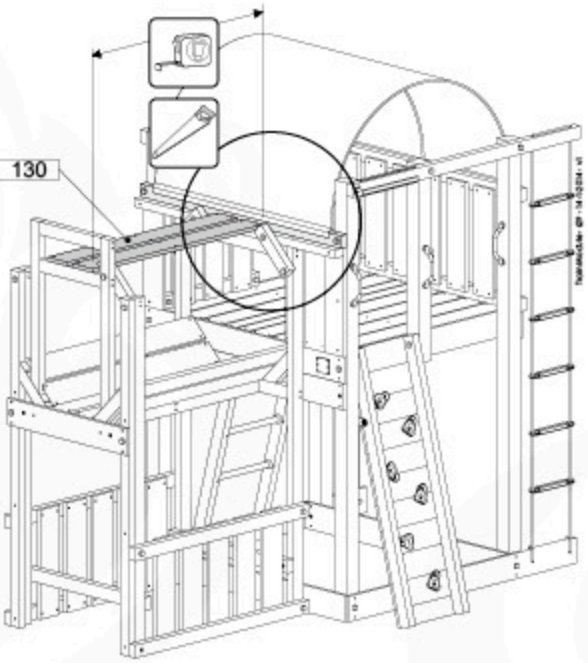

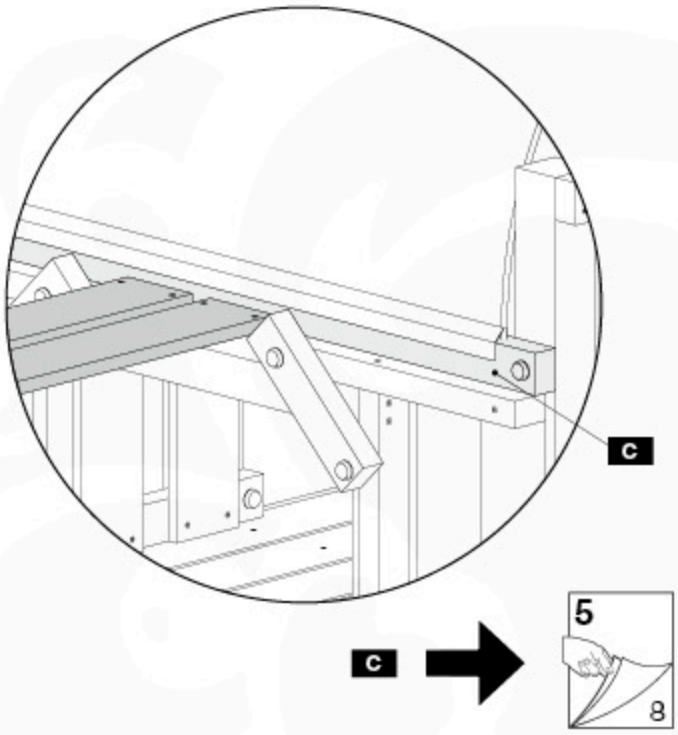

20a

16 - 24× 45 mm
002_220

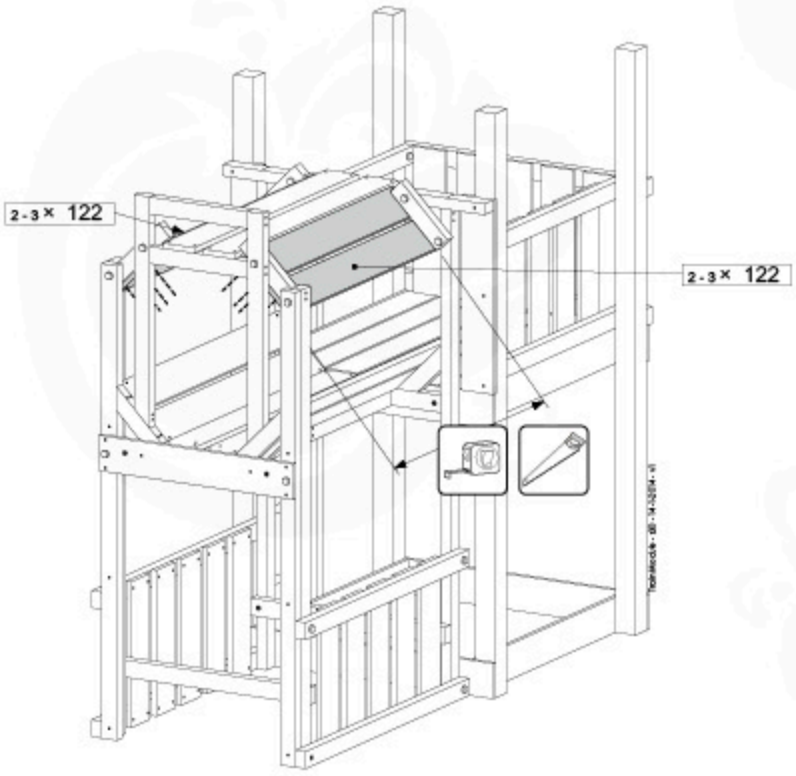

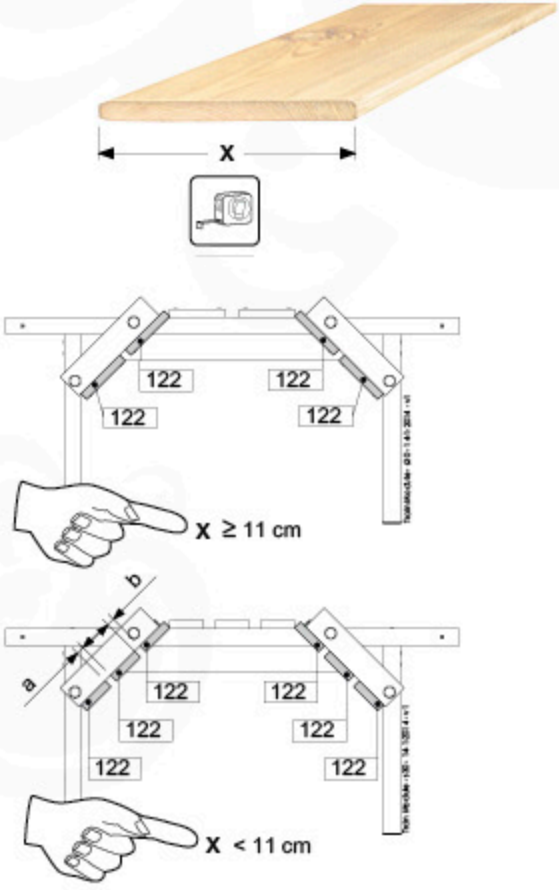

www.junglegym.com - © 2020 Jungle Gym B.V.

20b

16 - 24×
002_220

45 mm

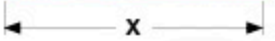

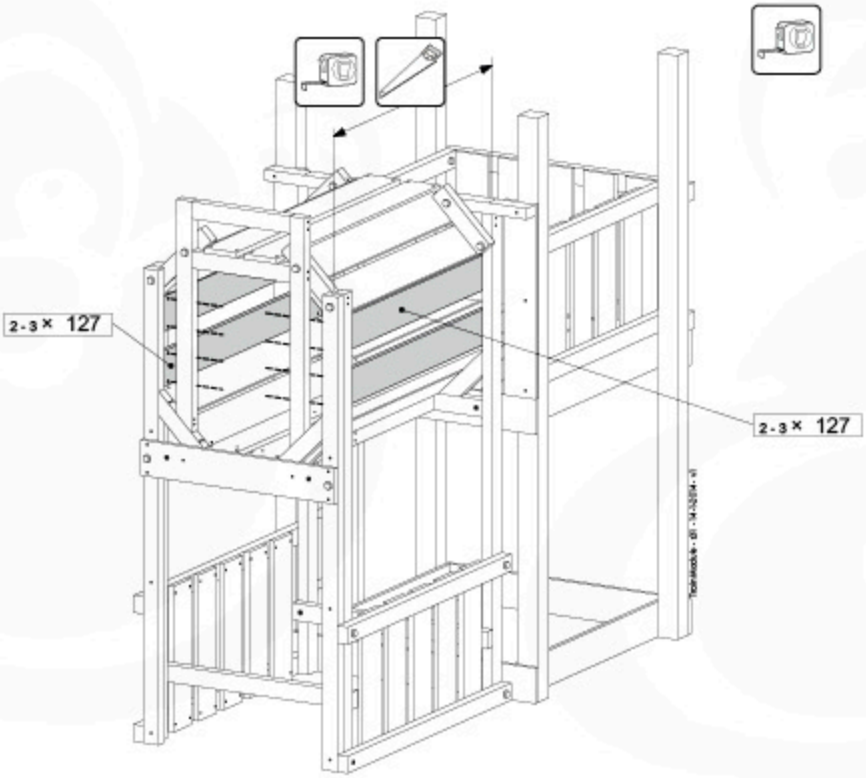

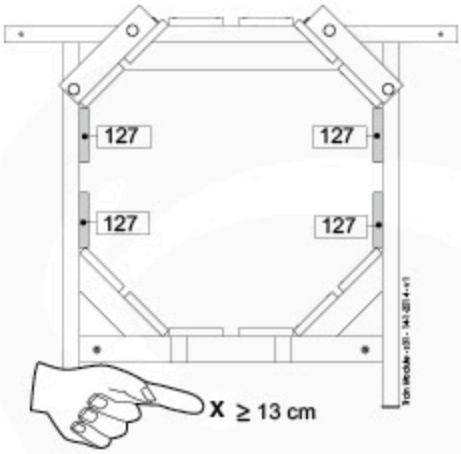

a = b

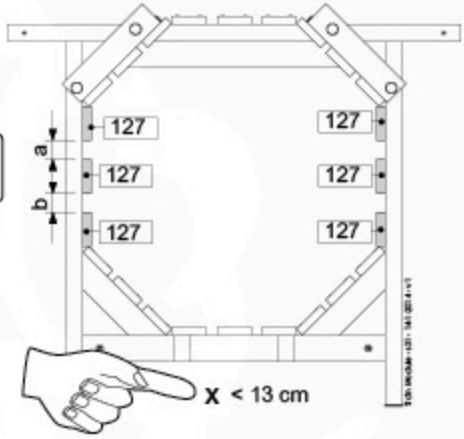

21a

8 - 16×
002_219

30 mm

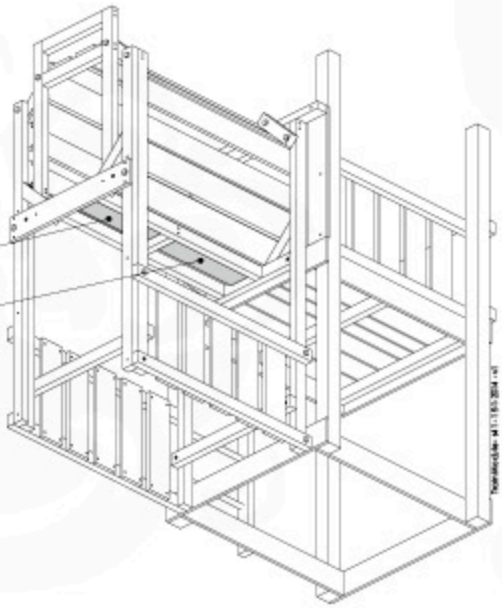

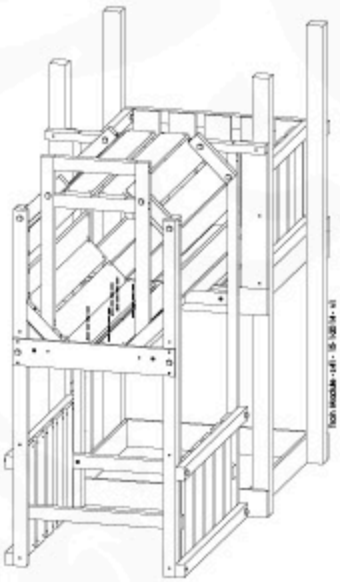

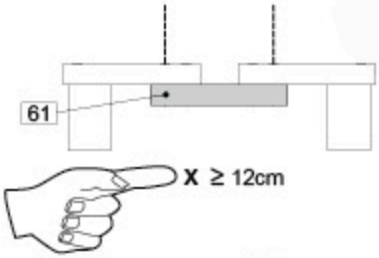

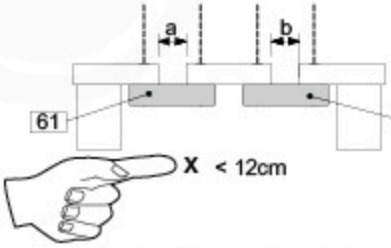

a = b

© 2020 Jungle Gym B.V. - www.junglegym.com

21b

2x
123_140

8x
002_044

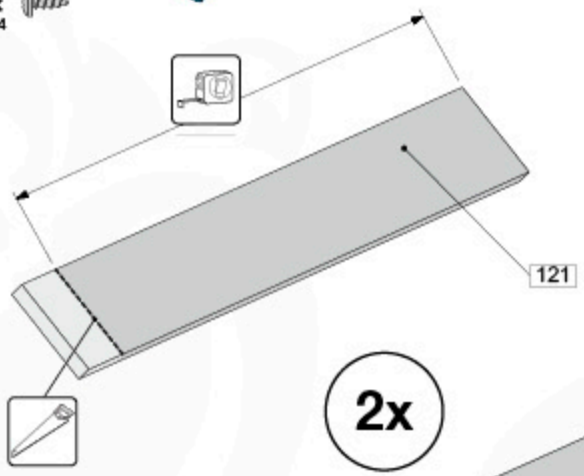

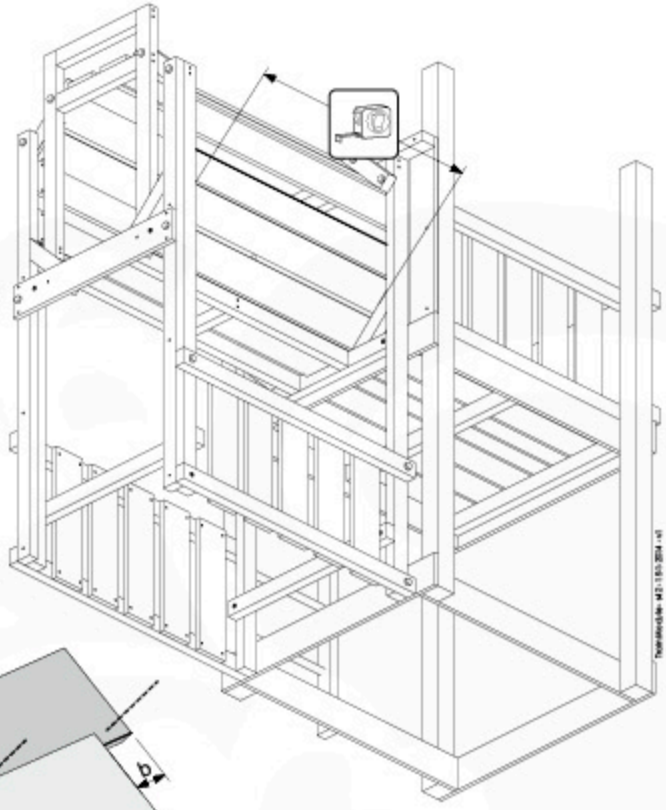

2x

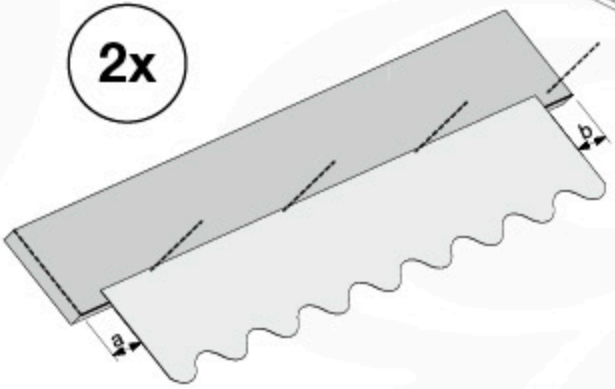

a = b

21c

12 - 24x
002_219

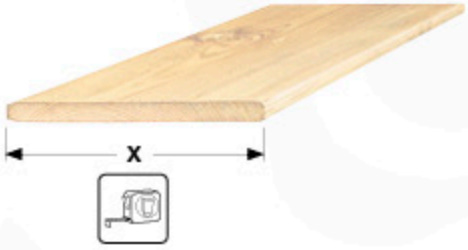

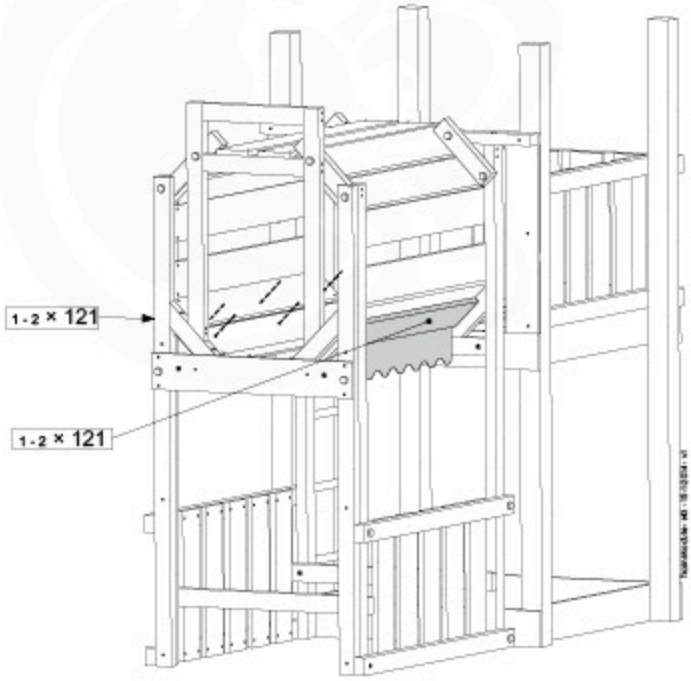

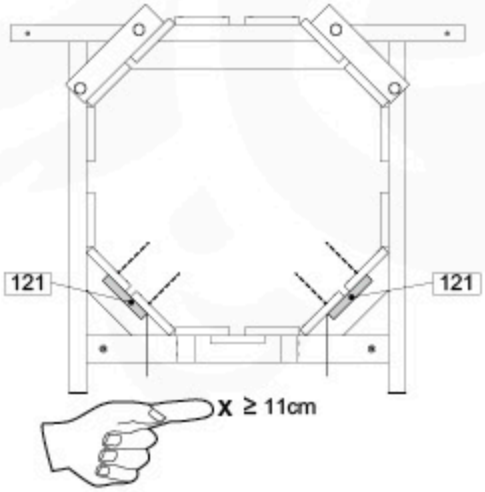

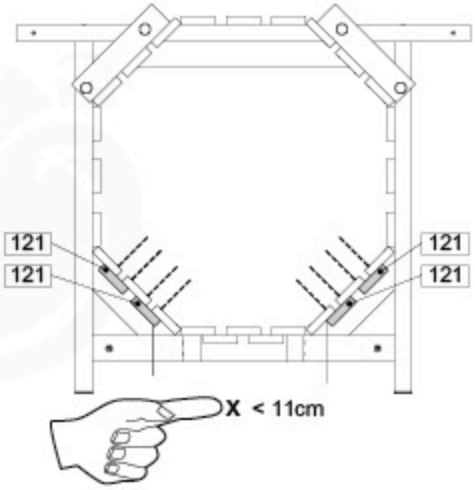

www.junglegym.com - © 2020 Jungle Gym B.V.

21d

12 - 24x
002_219

30 mm

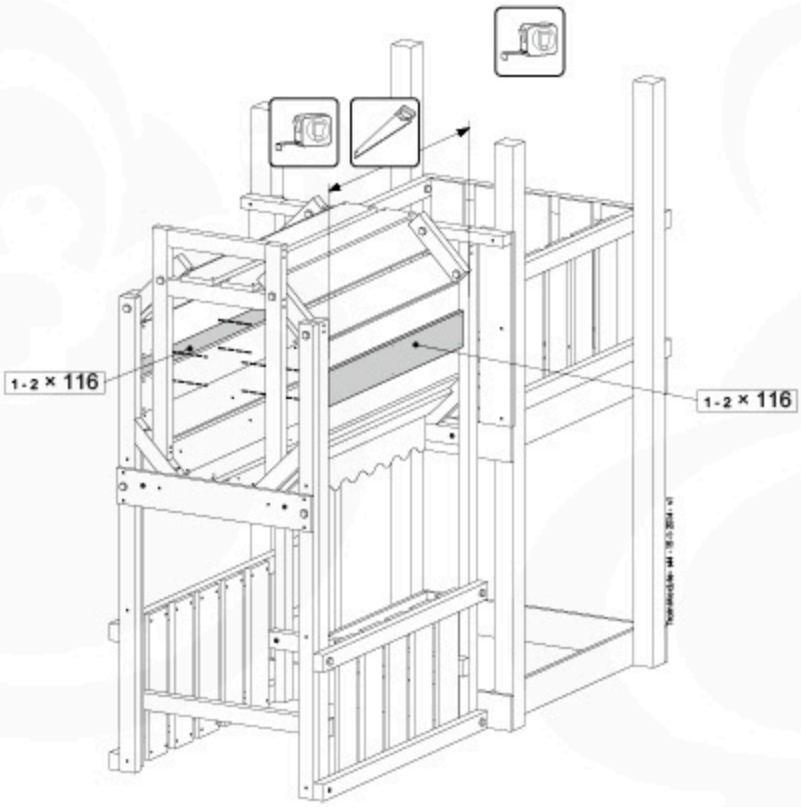

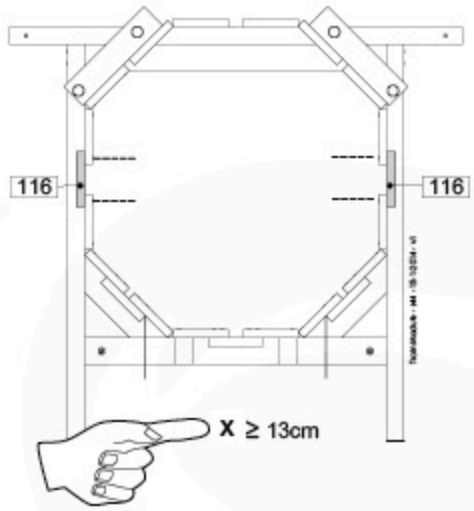

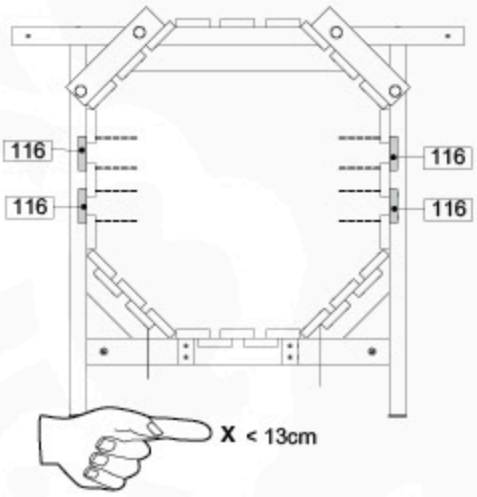

21e

18 - 36x
002_219

30 mm

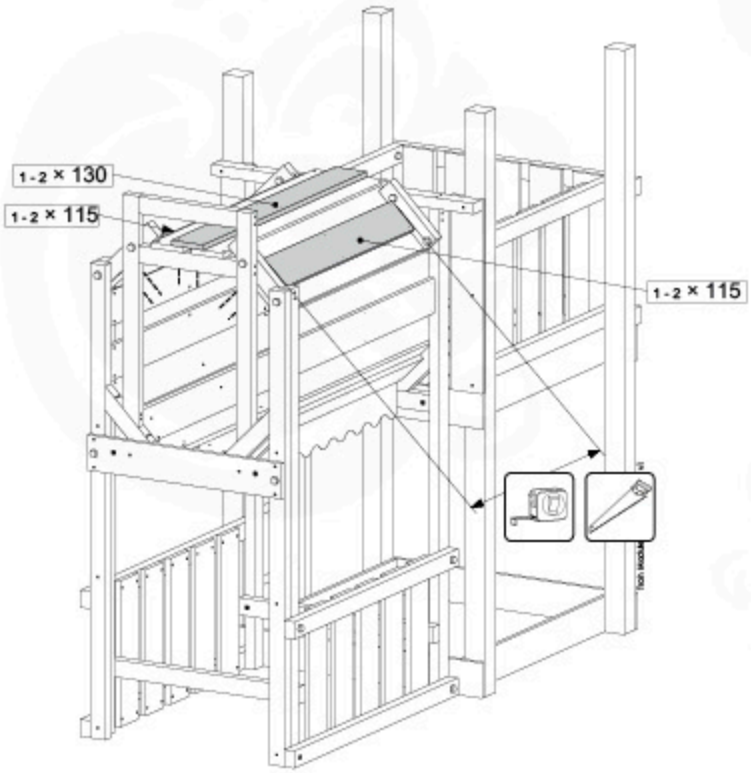

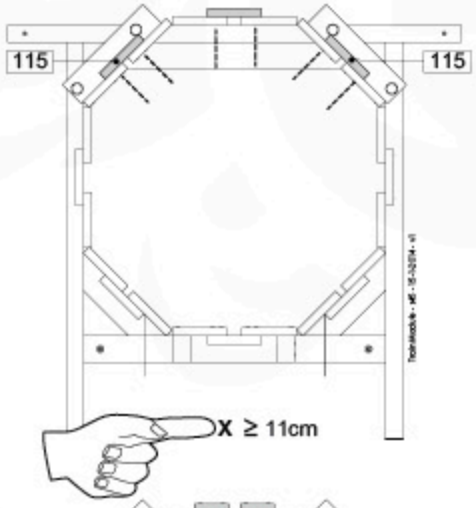

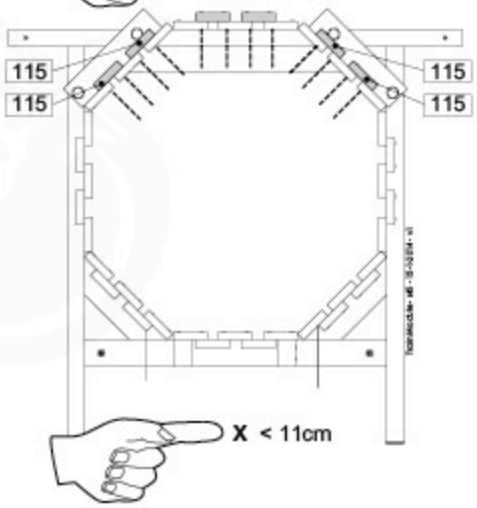

© 2020 Jungle Gym B.V. - www.junglegym.com

22

24× 002_223 80 mm

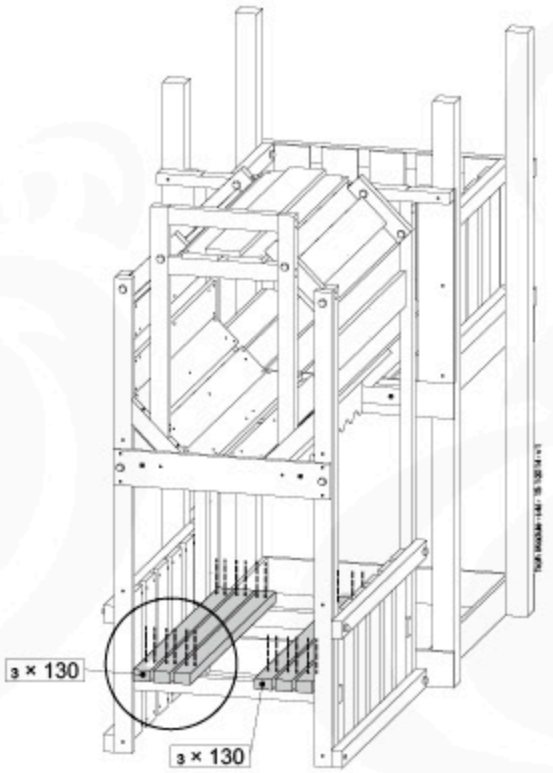

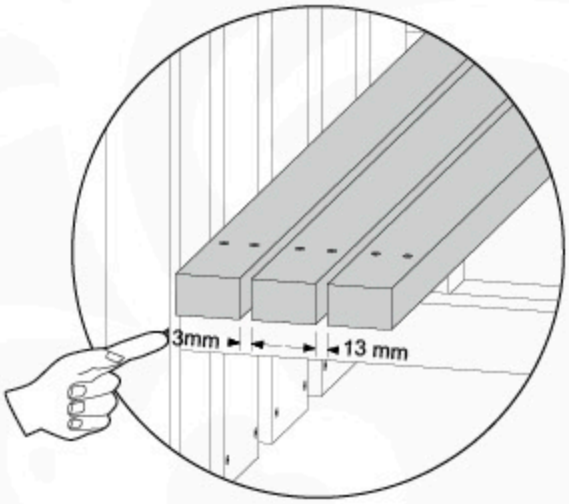

23a

2× 002_220 45 mm

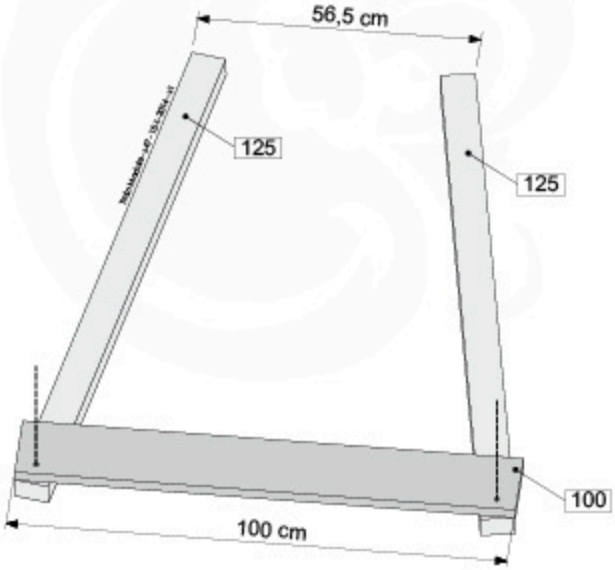

23b

2× 002_220 45 mm

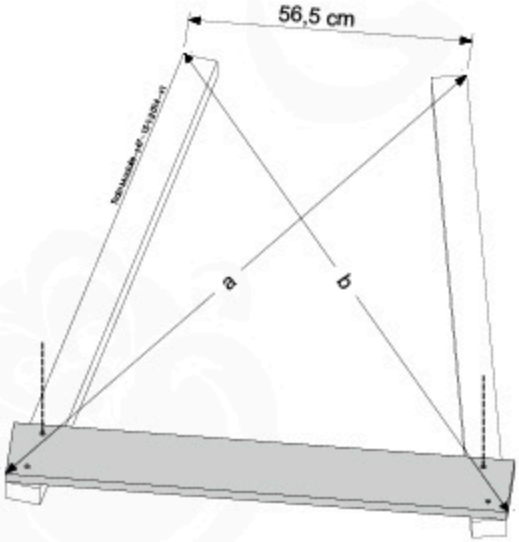

www.junglegym.com - © 2020 Jungle Gym B.V.

23c

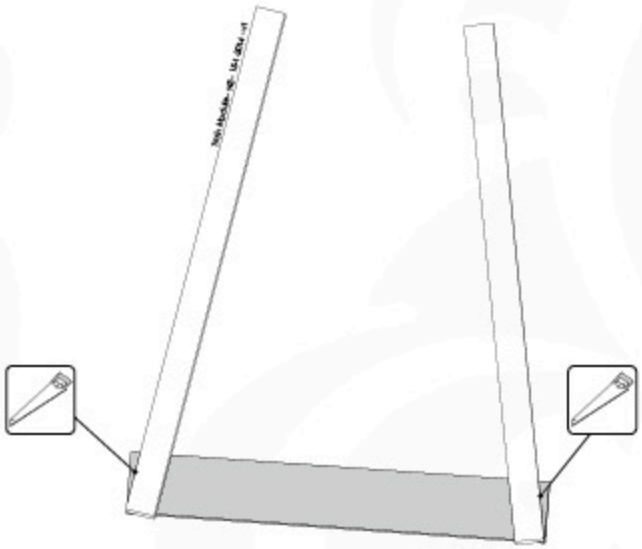

23d

16 - 24x 45 mm
002_220

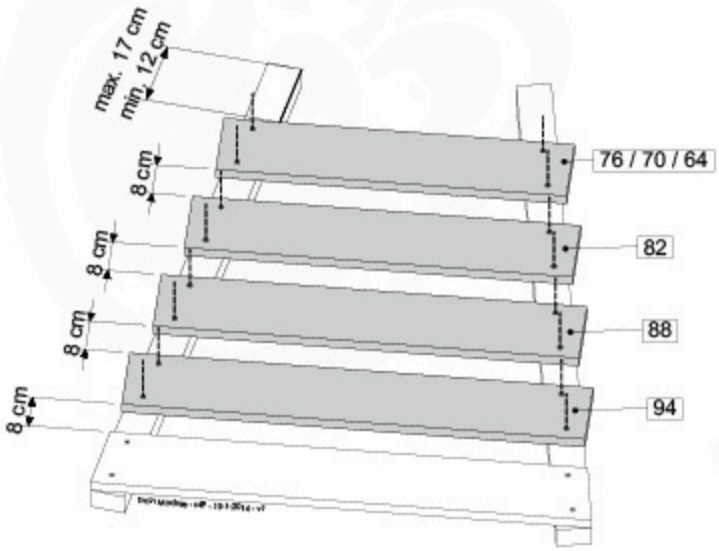

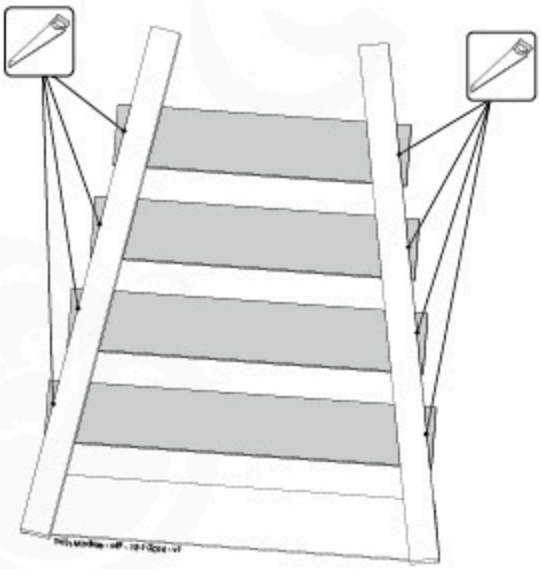

23e

4x 002_220 45 mm

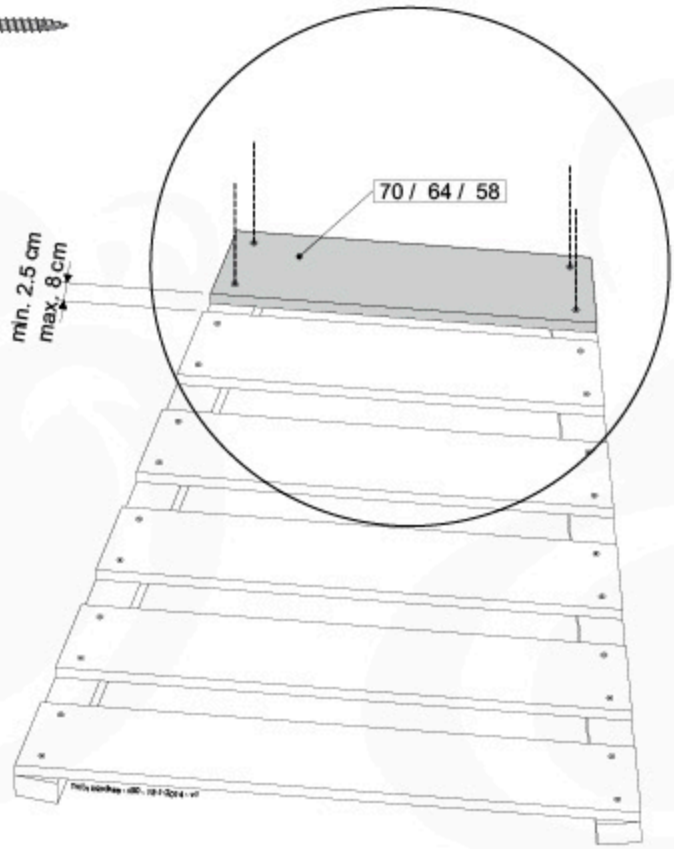

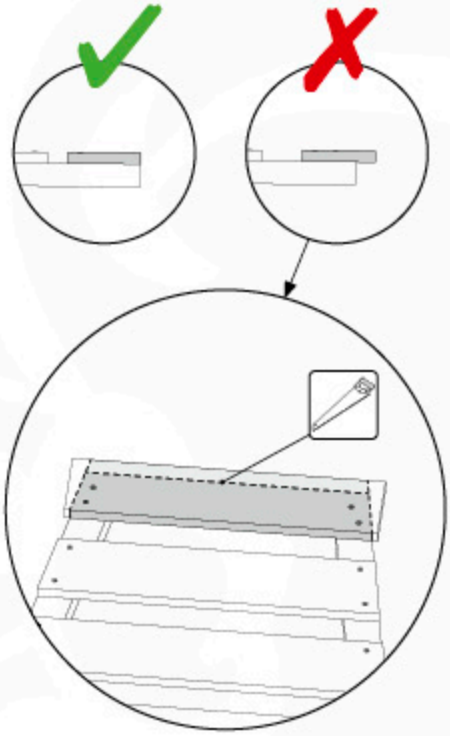

24a

10x 002_223 80 mm

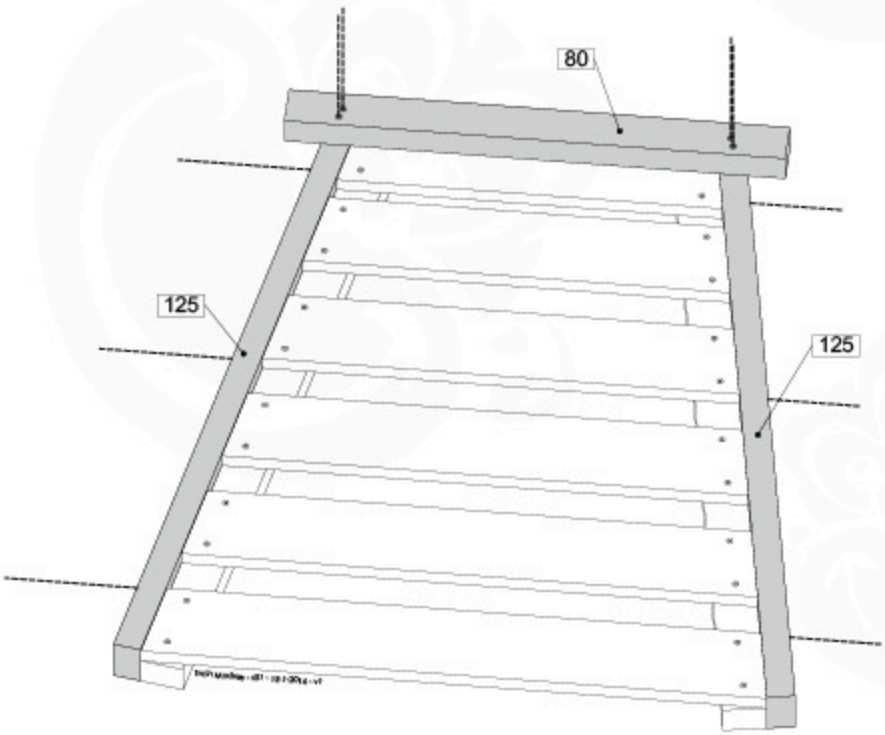

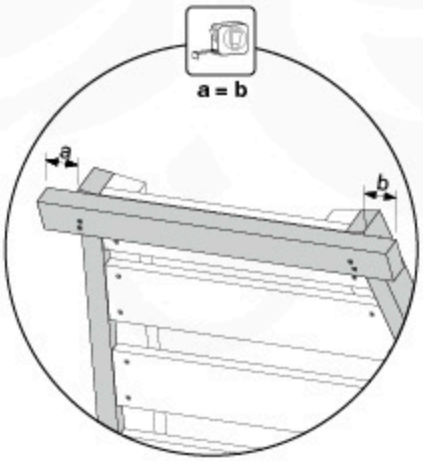

www.junglegym.com - © 2020 Jungle Gym B.V.

24b

6 - 8x
002_220

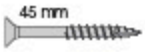

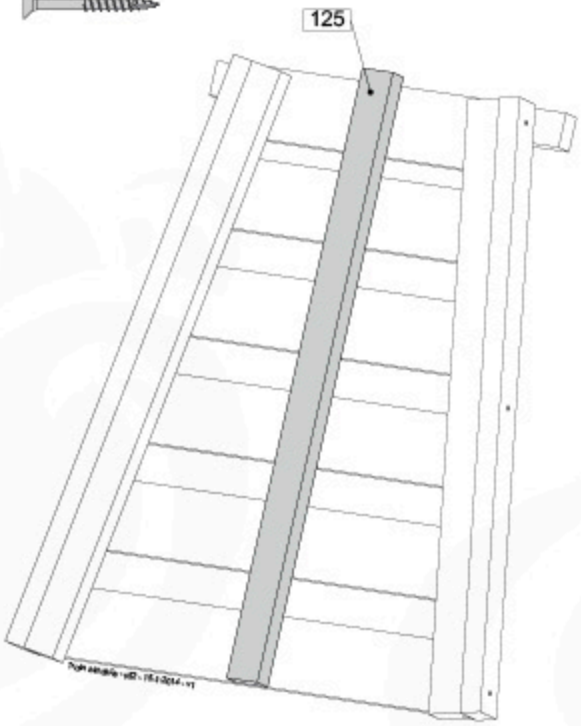

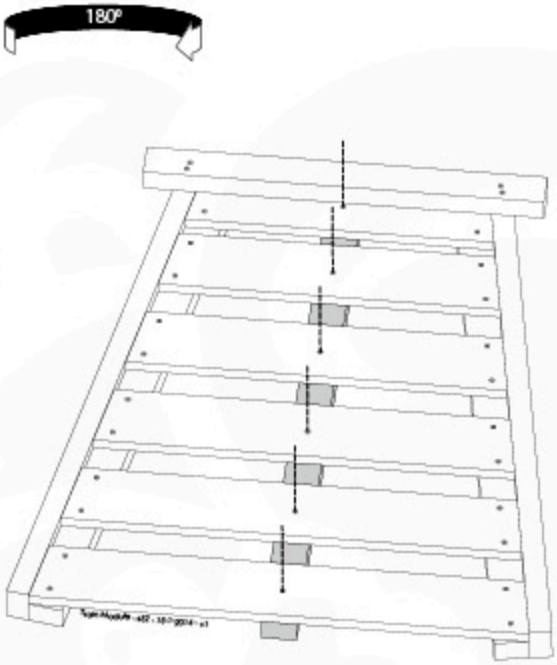

24c

2x
001_417

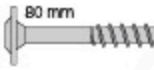

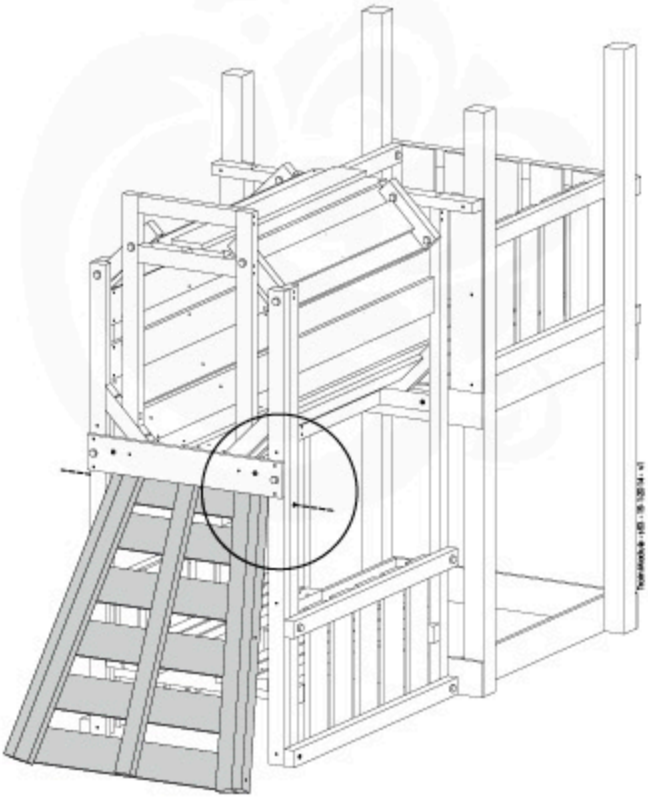

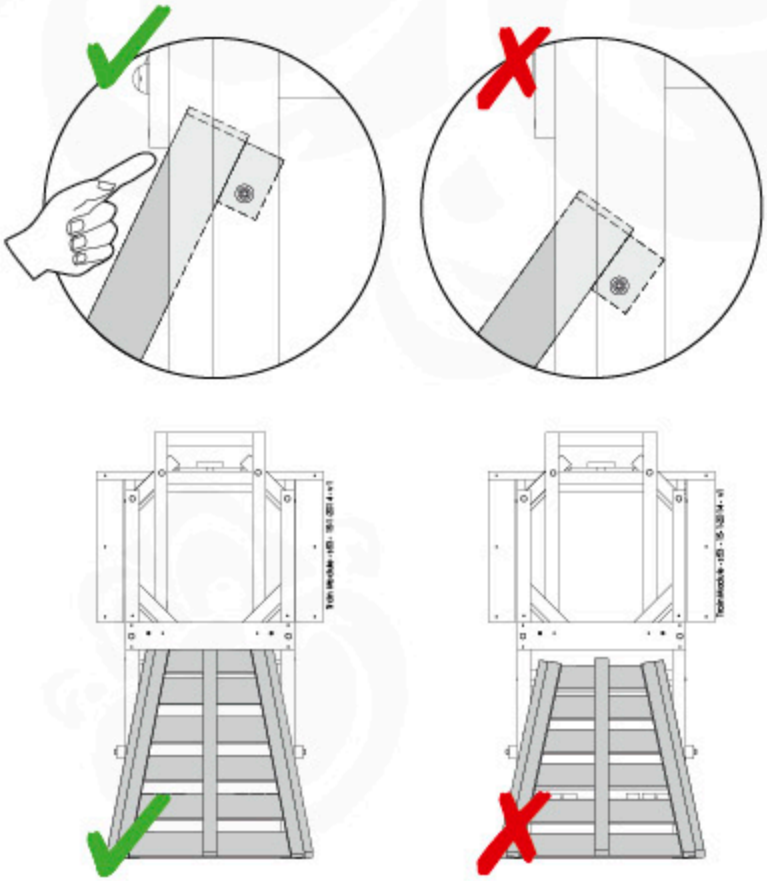

25a

72 - 96x
002_219

30 mm

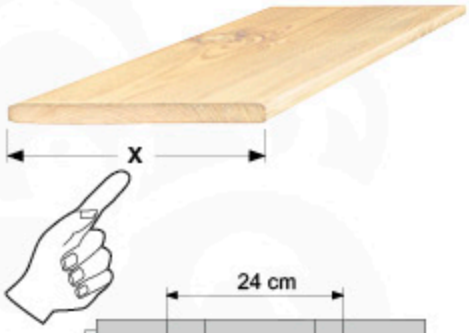

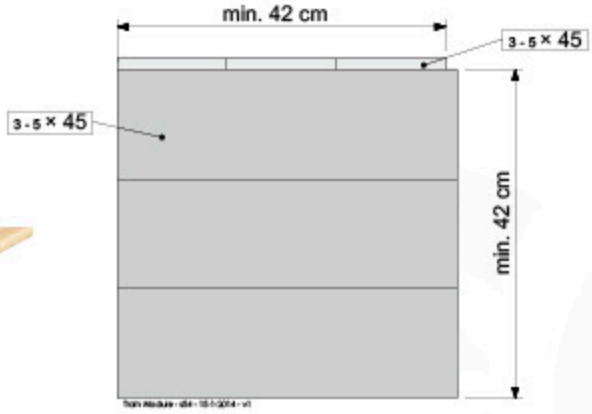

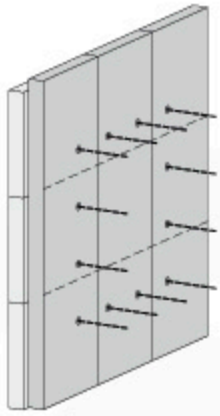

6x

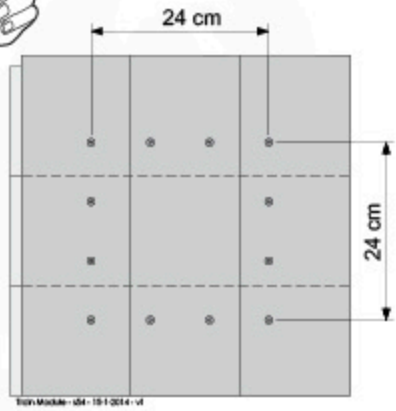

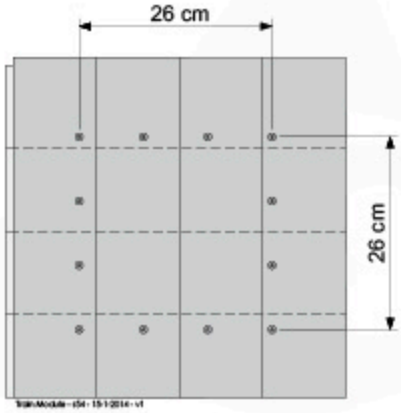

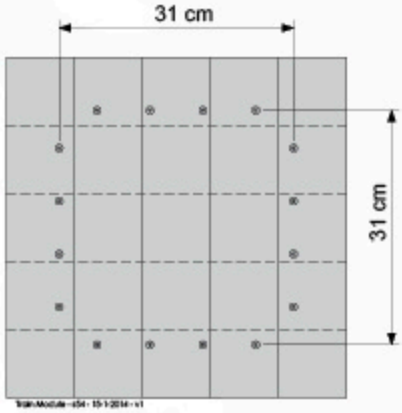

X ≥ 14 cm

X ≥ 10,5 cm
X < 14 cm

X < 10,5 cm

25b

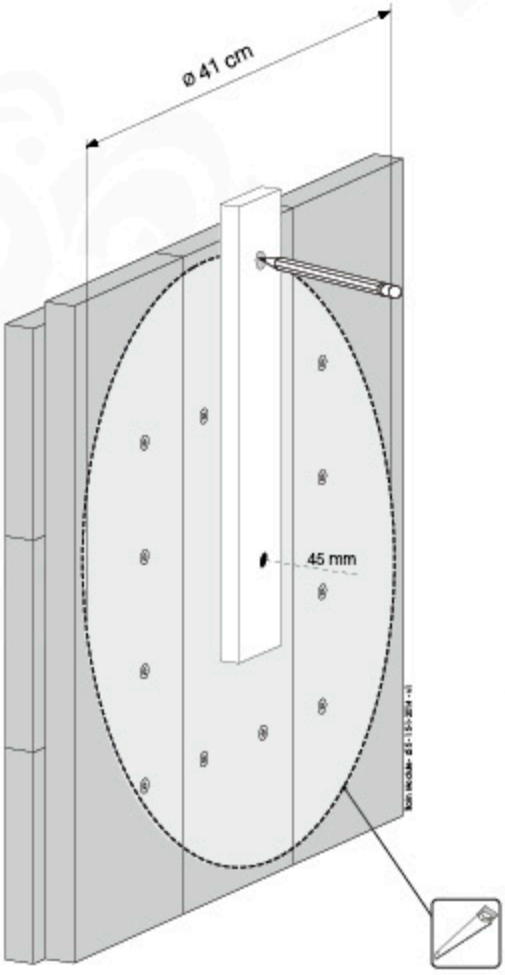

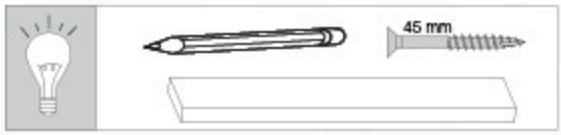

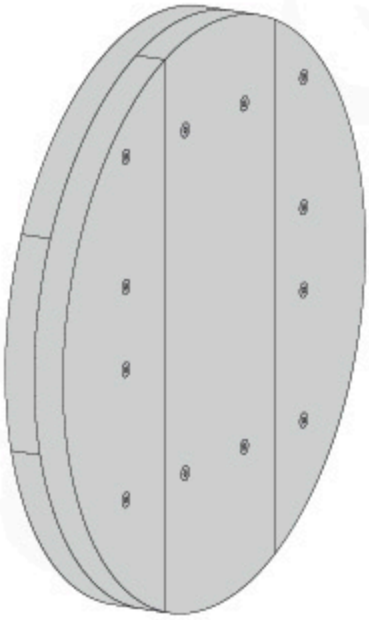

6x

www.junglegym.com - © 2020 Jungle Gym B.V.

25c

36x
001_404
120_005

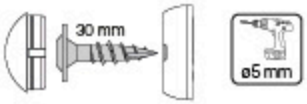

12x
022_349

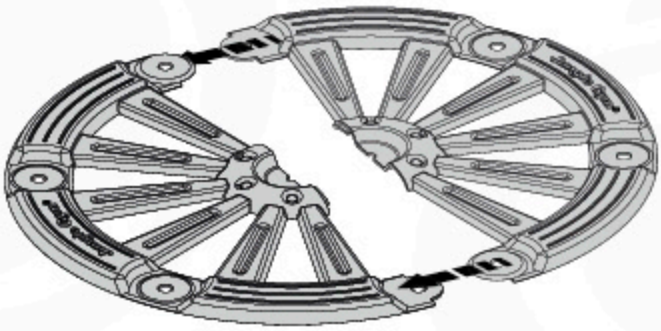

6x

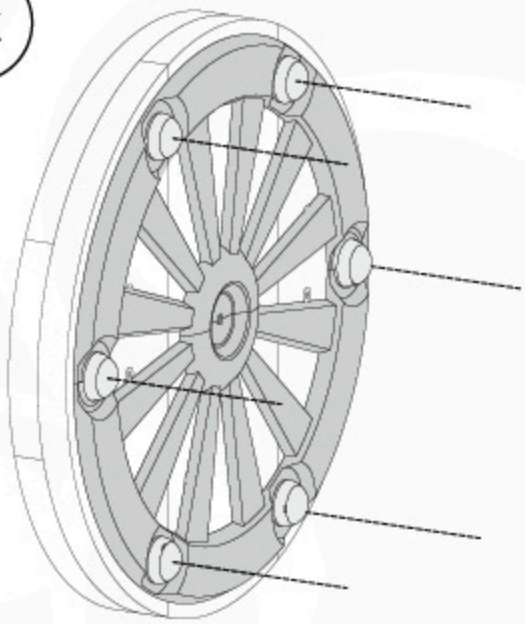

26a

Cubby
Tower

4x
002_220

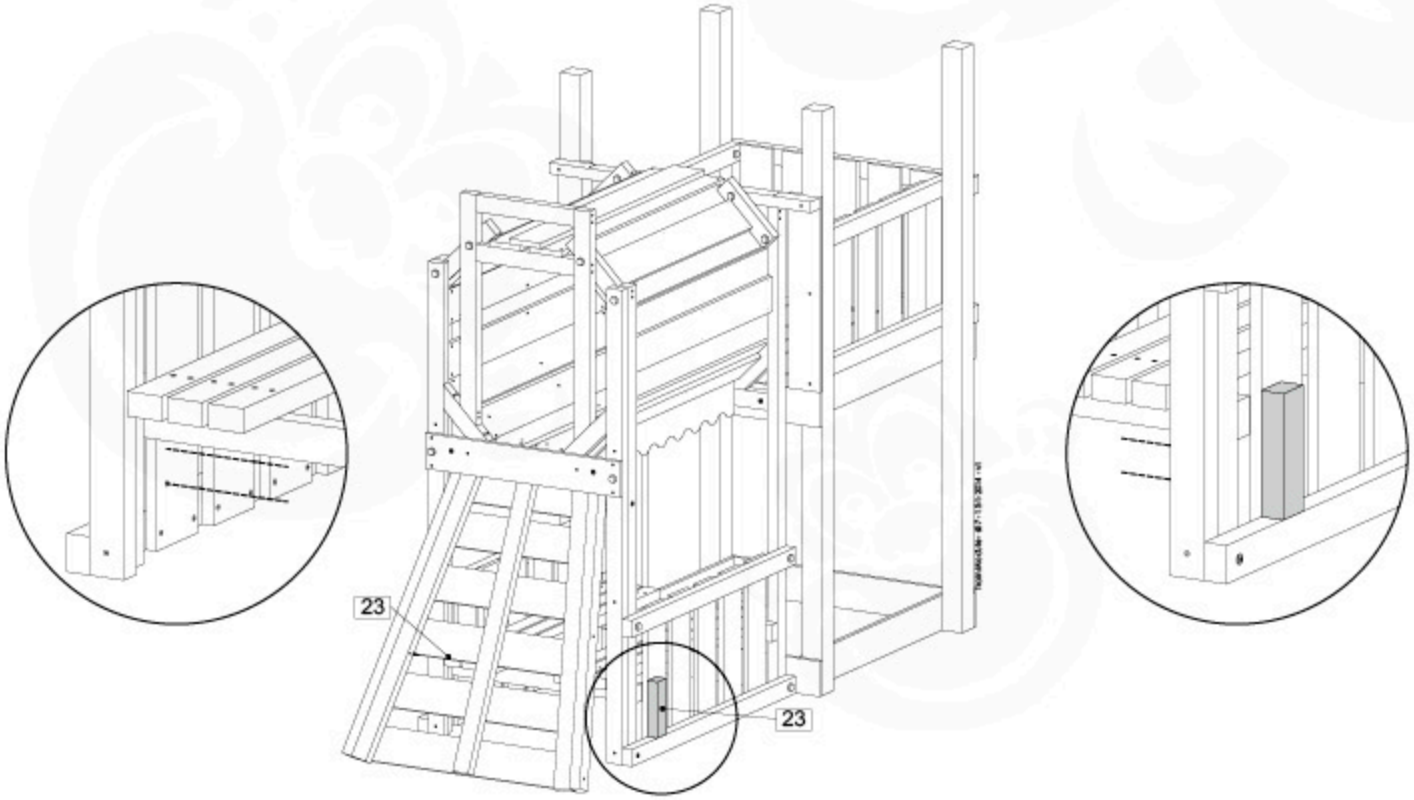

26b

6x
001_417
120_005

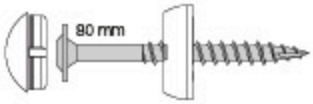

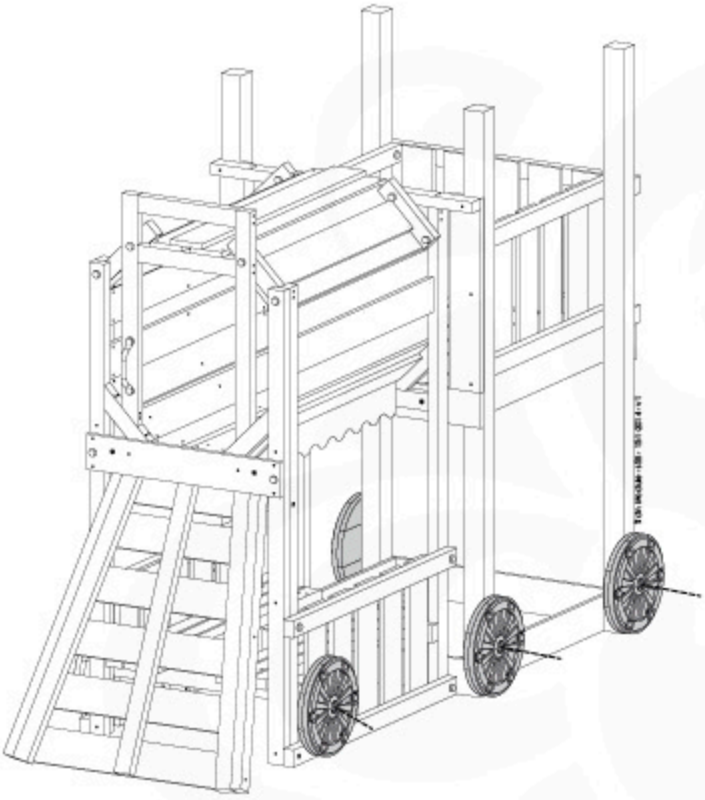

26a'

Cubby
Tower

8x
002_220

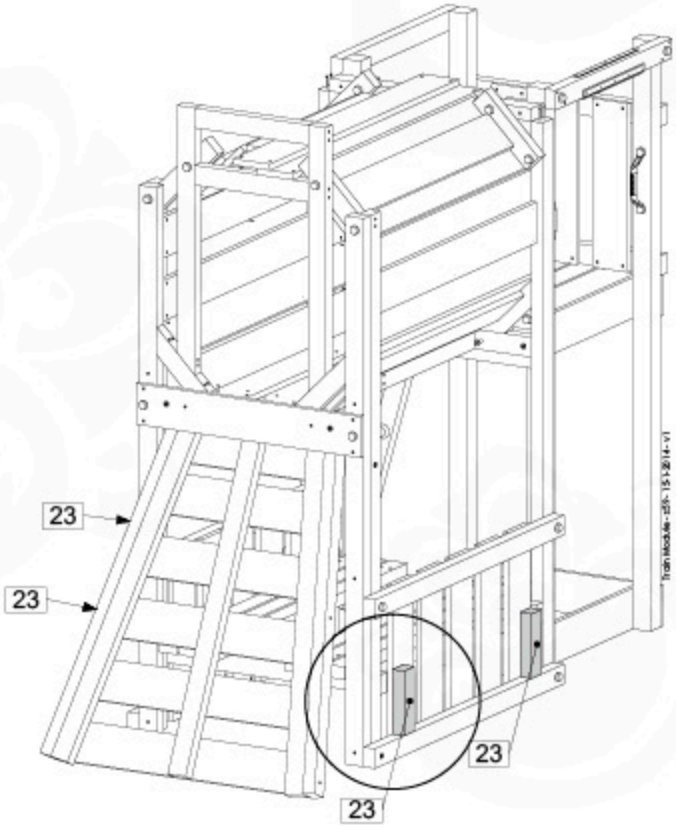

26b’

Cubby
Tower

6x
001_417
120_005

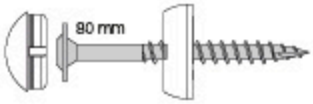

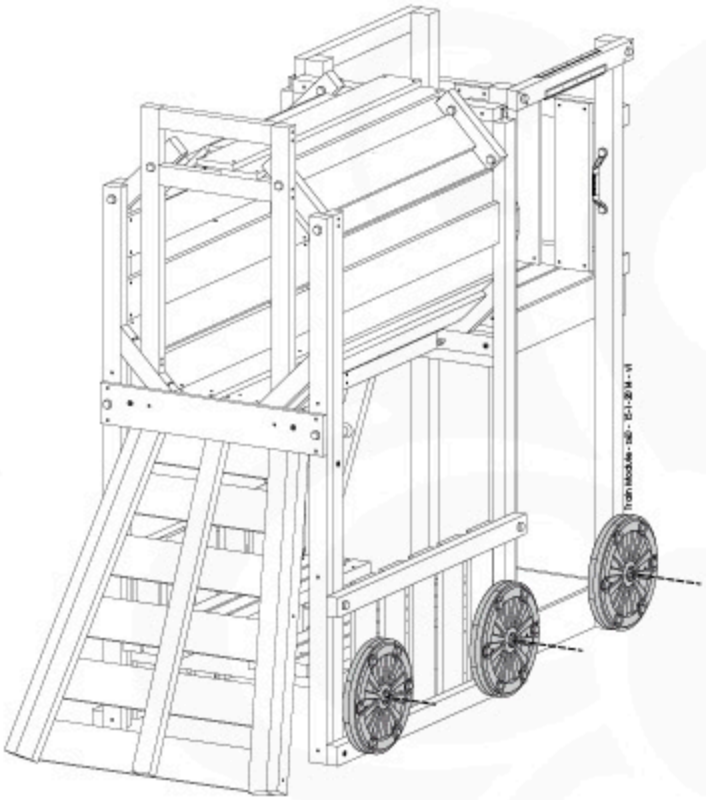

27a

8x
002_223

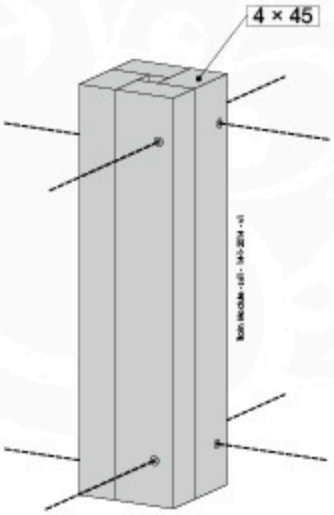

27b

6x
002_223

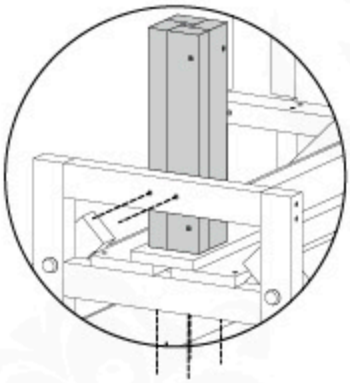

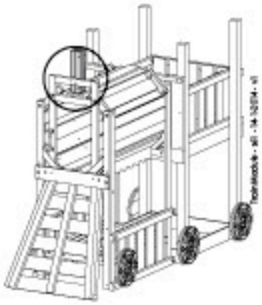

28

4x
022_845
001_404

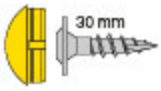

2x
022_320

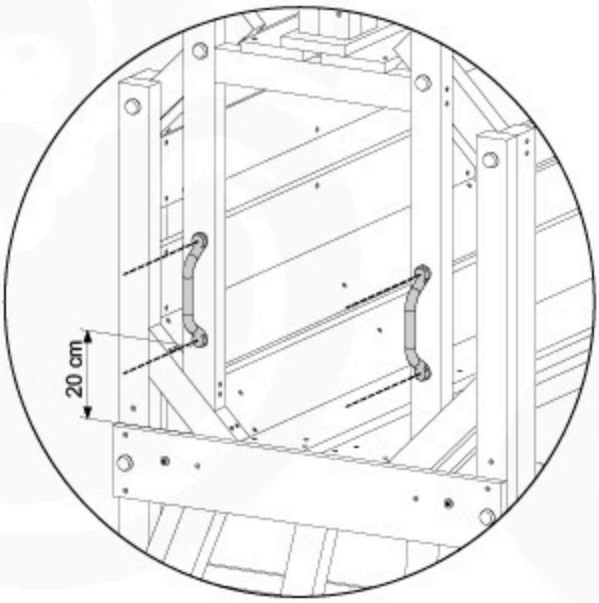

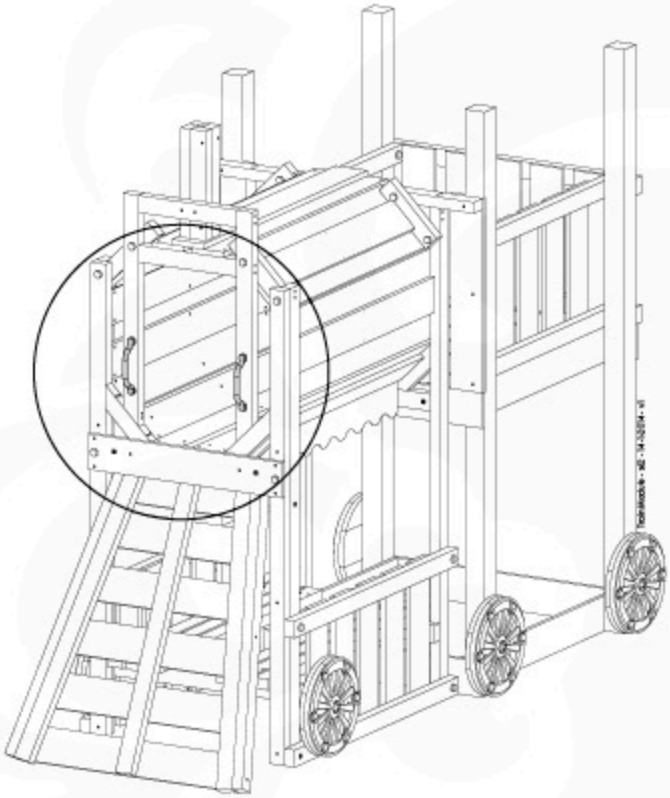

29

6x
002_041

1x
008_101

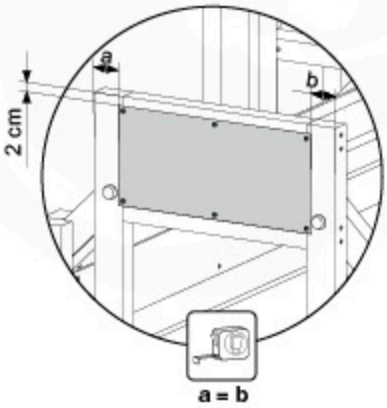

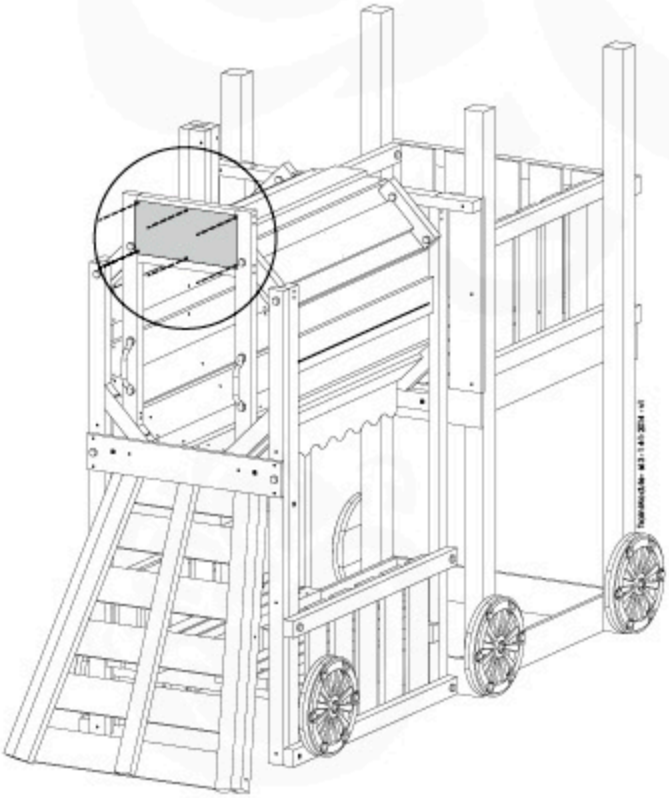

www.junglegym.com - © 2020 Jungle Gym B.V.

30

12x
002_219

4x
022_350

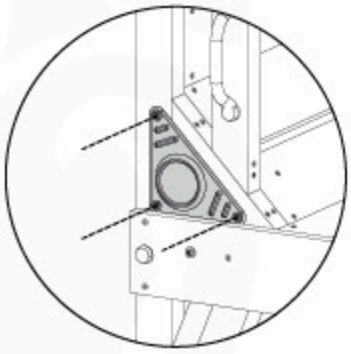

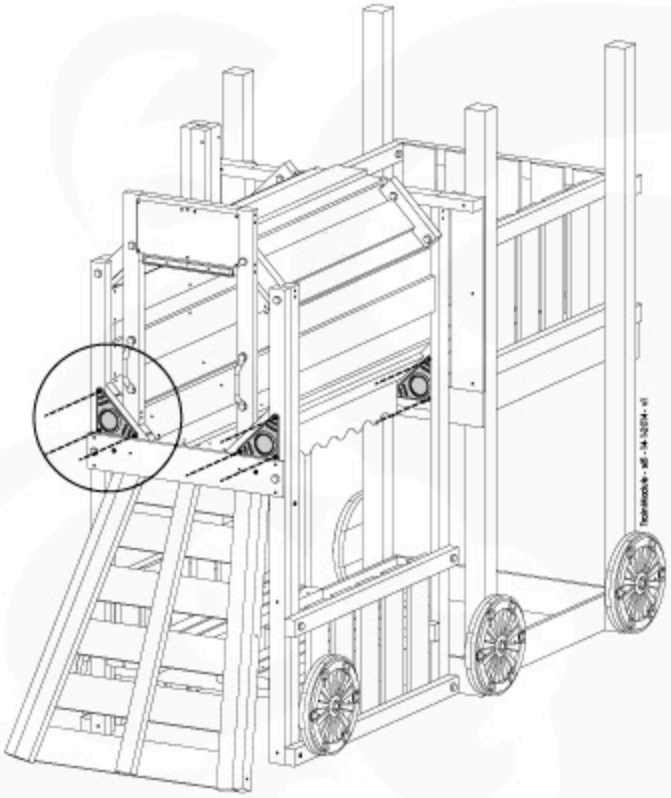

31

1x
001_406
022_845

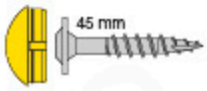

1x
022_300

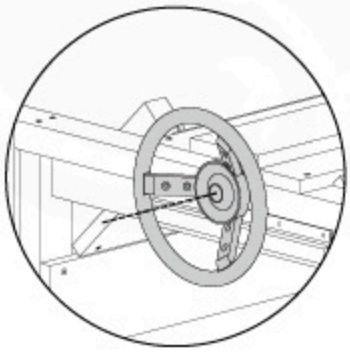

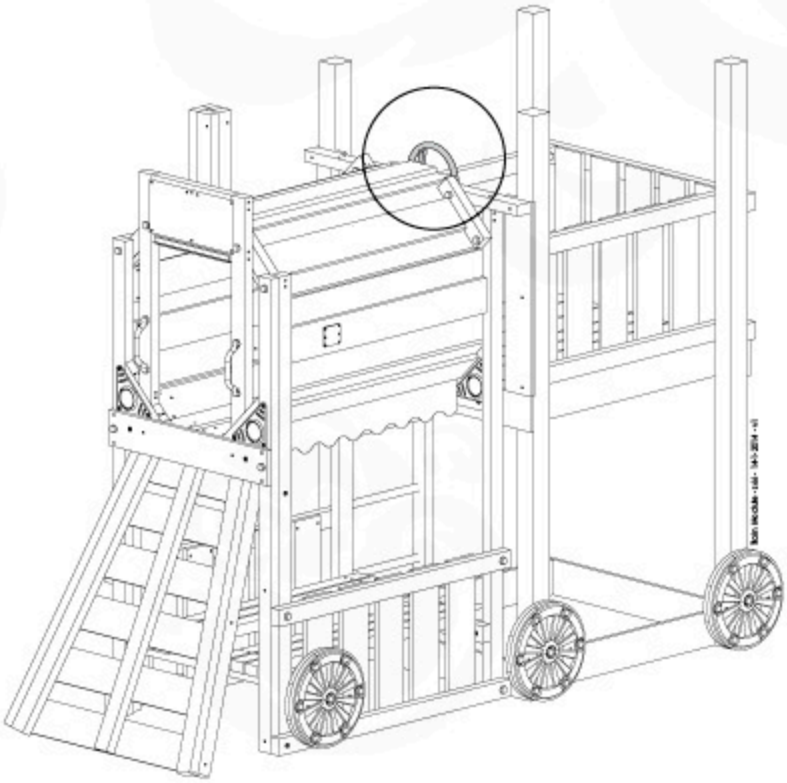

32 Safety Check

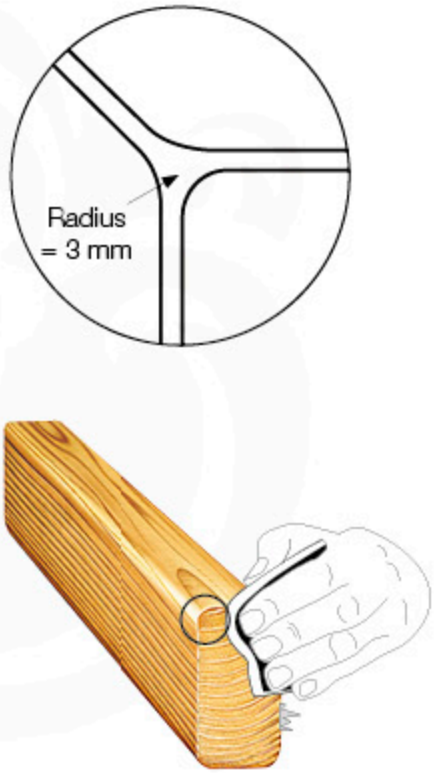

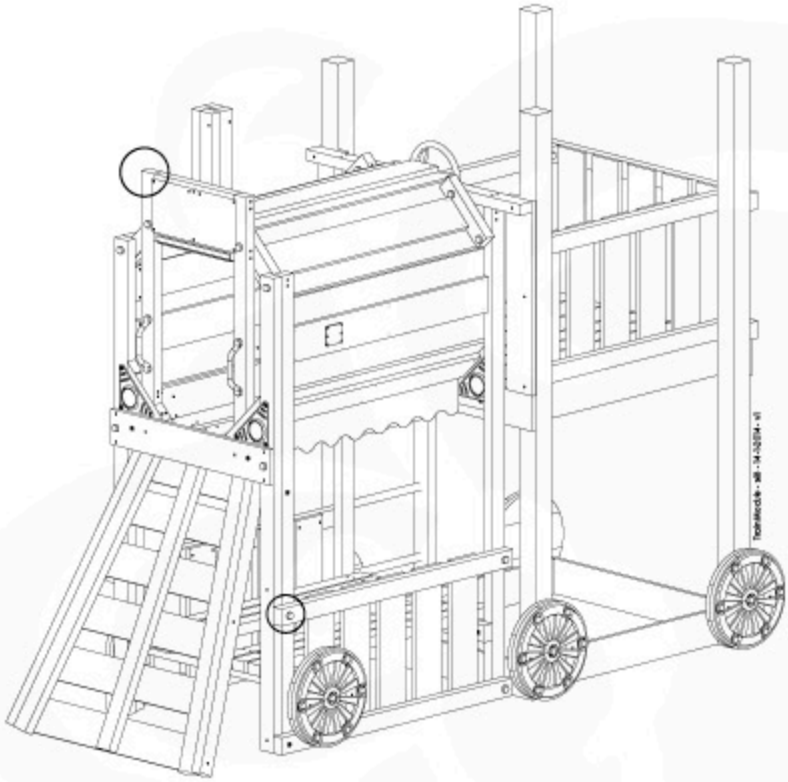

33

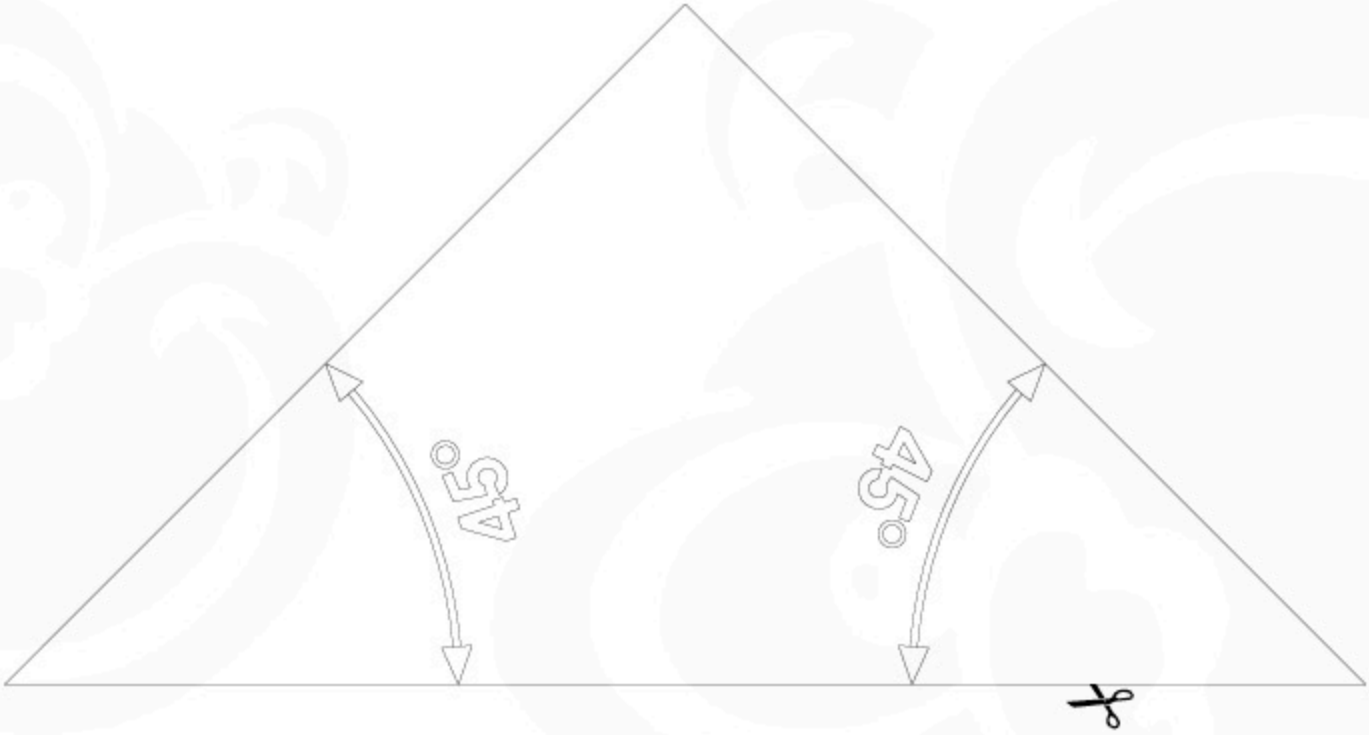
45°
45°

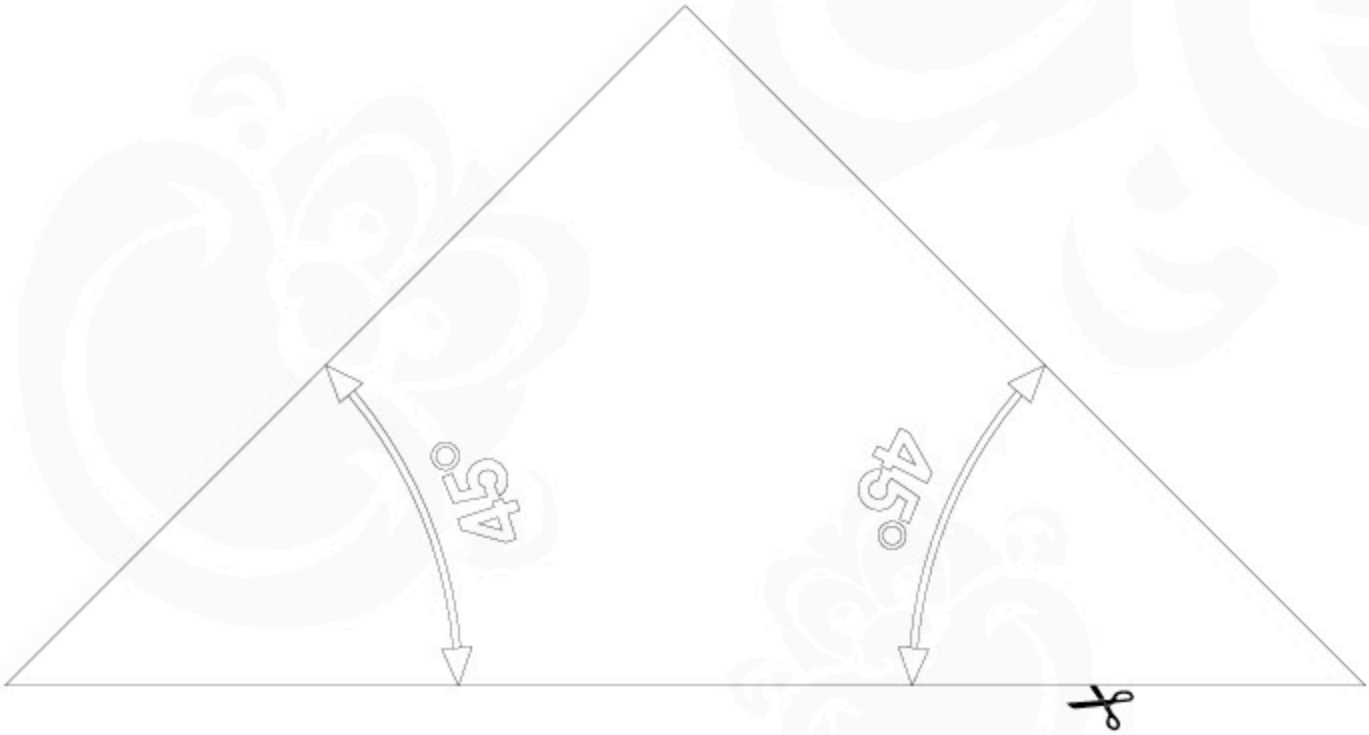
45°
45°

Playtowers

XL	Jungle Palace	801_005
XL	Jungle Barn	801_007
XL	Jungle Farm	801_008
	Jungle Mansion	801_009
L	Jungle Fort	801_010
L	Jungle Chalet	801_013
L	Jungle Villa	801_020
M	Jungle Lodge	801_040
M	Jungle Cabin	801_060
M	Jungle Shelter	801_065
M	Jungle Cubby	801_070
M	Jungle Cottage	801_090
S	Jungle House	801_095
S	Jungle Hut	801_100
S	Jungle Home	801_103
S	Jungle Casa	801_105
S	Jungle Club	801_110
S	Jungle Castle	801_120
XS	Jungle Tower	801_200

Playhouses

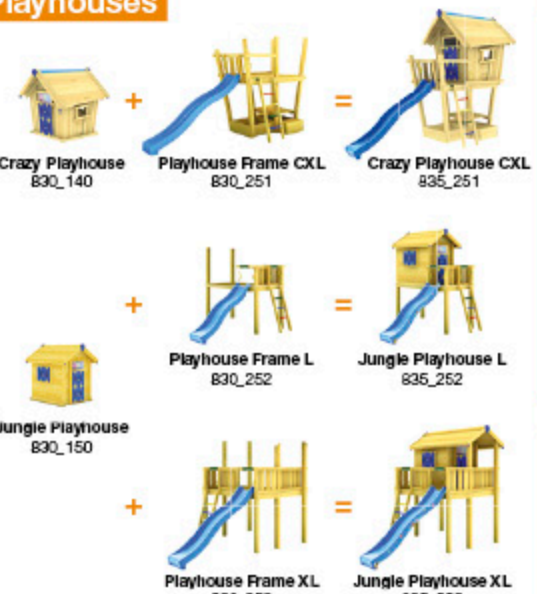

Crazy Playhouse	830_140	
+ Playhouse Frame CXL	830_251	= Crazy Playhouse CXL 835_251
Jungle Playhouse	830_150	
+ Playhouse Frame L	830_252	= Jungle Playhouse L 835_252
+ Playhouse Frame XL	830_253	= Jungle Playhouse XL 835_253

Modules

1-Swing Module	850_176
2-Swing Module	850_177
Climb Module	850_230
Bridge Module	850_240
Playhouse Module	850_246 (_247)
Balcony Module	850_255
Mini Market Module	850_261
Mini Picnic Module	850_262(_263)
Boat Module	850_410
Train Module	850_415

Swings

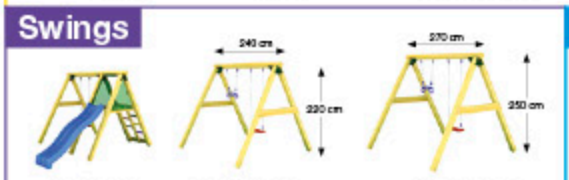

Jungle Peak	801_300
Jungle Swing	801_601
Jungle Swing	801_602

Links

Bridge Link	870_100
Net Link	870_105

Accessories

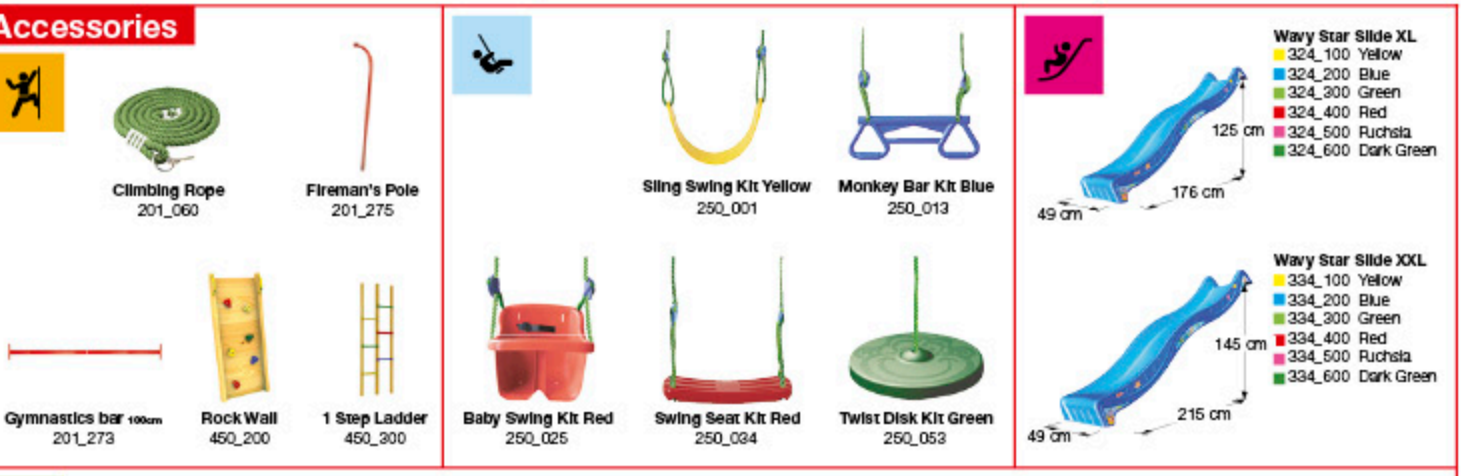

Climbing Rope	201_060
Fireman's Pole	201_275
Gymnastics bar 100cm	201_273
Rock Wall	450_200
1 Step Ladder	450_300
Sling Swing Kit Yellow	250_001
Monkey Bar Kit Blue	250_013
Baby Swing Kit Red	250_025
Swing Seat Kit Red	250_034
Twist Disk Kit Green	250_053

Wavy Star Slide XL
- 324_100 Yellow
- 324_200 Blue
- 324_300 Green
- 324_400 Red
- 324_500 Fuchsia
- 324_600 Dark Green

125 cm, 176 cm, 49 cm

Wavy Star Slide XXL
- 334_100 Yellow
- 334_200 Blue
- 334_300 Green
- 334_400 Red
- 334_500 Fuchsia
- 334_600 Dark Green

145 cm, 215 cm, 49 cm

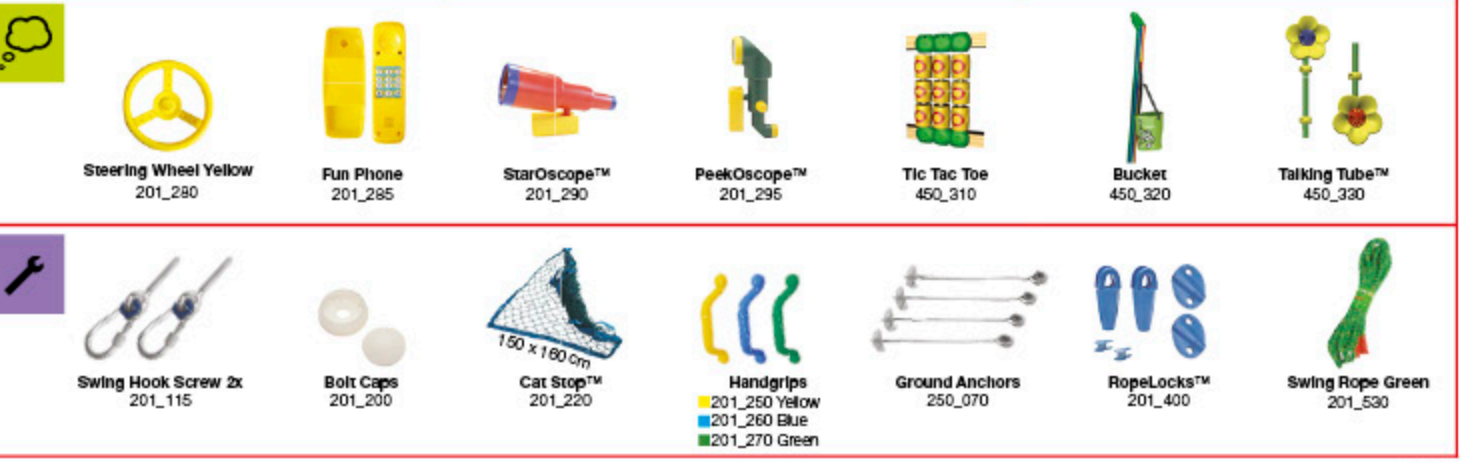

Steering Wheel Yellow	201_280
Fun Phone	201_285
StarOscope™	201_290
PeekOscope™	201_295
Tic Tac Toe	450_310
Bucket	450_320
Talking Tube™	450_330
Swing Hook Screw 2x	201_115
Bolt Caps	201_200
Cat Stop™ (150 x 160 cm)	201_220
Handgrips	201_250 Yellow, 201_260 Blue, 201_270 Green
Ground Anchors	250_070
RopeLocks™	201_400
Swing Rope Green	201_530

v 2.10.2

Jungle Gym®
BACKYARD PLAYGROUNDS

Availability of Jungle Gym® products may vary between distributors and countries.
Subject to alterations and printing errors. All rights reserved. Printed in China.
P.O. Box 75083 - 1070 AB - Amsterdam - The Netherlands

www.junglegym.com