Assembly instructions

Activity toys to be assembled by adults for outdoor domestic use.

Montageanleitung

Aktivitätsspielzeug zum Zusammenbauen durch Erwachsene für den Einsatz im häuslichen Außenbereich.

Instructions de montage

Jouets d'activité à assembler par des adultes pour une utilisation extérieure familial.

2 PART

Design Code : ZzsFCu
Article Number : 211136, 403_202
Product Name : Jungle Nomad

Manual ID: 040_075_2613

360°

Jungle Gym
BACKYARD PLAYGROUNDS
since 1988

Assembly time

5.0

hours by 2 adults

EN. Warning! Only for domestic use. Maximum number of users is 6. **DE.** Achtung! Nur für den Hausgebrauch. Maximale Benutzerzahl: 6. **FR.** Attention! Réservé à un usage familial. Le nombre maximal d'utilisateurs est de 6. **BG.**Внимание! За употреба само в домашни условия. Максималният брой потребители е 6. **CS.** Varování! Jen pro domácí použití. Maximální počet uživatelů je 6. **DA.** Advarsler! Kun til privat brug. Maksimum antal brugere er 6. **EL.** Προειδοποιήσεις! Μόνο για οικιακή χρήση. Μέγιστος αριθμός χρηστών 6. **ES.** Advertencias! Sólo para uso doméstico. Número máximo de usuarios: 6. **ET.** Hoiatused! Ainult koduseks kasutamiseks. Maksimaalne kasutajate arv on 6. **FI.** Varoitukset! Ainoastaan kotikäyttöön. Käyttäjiä yhteensä enintään 6. **HR.** Upozorenja! Samo za uporabu u domu. Maksimalan broj korisnika je 6. **HU.** Figyelmeztetések! Csak otthoni használatra! A használók max. száma: 6. **IS.** Varnaðarorð! Eingöngu fyrir einkanotkun í heimahúsum og á einkaló›um. Hámarksfjöldi notenda er 6. **IT.** Avvertenze! Solo per uso domestico. Massimo numero di utenti è 6. **LT.** Dėmesio! Tik buitiniam naudojimui. Maksimalus naudotojų skaičius 6. **LV.** Brīdinājumi. Izmantot tikai mājās. Maksimālais lietotāju skaits ir 6. **NL.** Waarschuwing! Uitsluitend voor huishoudelijk gebruik. Het maximale aantal gebruikers is 6. **NO.** Advarsler! Kun for privat bruk. Maksimalt antall brukere er 6. **PL.** Ostrzeżenia! Wyłącznie do użytku domowego. Maksymalna liczba użytkowników to 6. **PT.** Avisos! Apenas para uso doméstico. O número máximo de utilizadores é 6. **RO.** Avertismente! Numai pentru uz domestic. Numărul maxim de utilizatori este 6. **SK.** Upozornenia! Iba na domáce použitie. Maximálne množstvo osôb je 6. **SL.** Opozorila! Samo za domačo uporabo. Maksimalno število uporabnikov je 6. **SV.** Varningar! Endast för hemmabruk. Det maximala antalet användare är 6.

UK CA CE

0-3 3-10

Design code: ZzsFCu, © 2025 Jungle Gym B.V. All rights reserved. Single-owner licensed. No part of this document may be reproduced or utilized otherwise in any form or by any means, electronic or mechanical, including photocopying or posting on the internet or an intranet—copying and networking prohibited.

General safety notice
Allgemeine Sicherheitswarnung
Avertissement de securité général

OWNER'S MANUAL

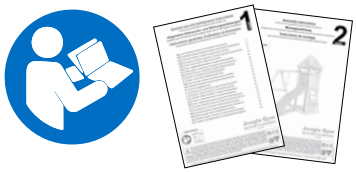

Important: Before assembling and using this product, please carefully read the provided Use- and maintenance instructions (Part 1) and assembly instructions (Part 2) thoroughly.

Wichtig: Lesen Sie vor der Montage und Benutzung dieses Produkts die beiliegende Gebrauchs- und Wartungsanweisungen (Teil 1) und die Montageanleitung (Teil 2) sorgfältig durch.

Important: Avant de monter et d'utiliser ce produit, veuillez lire attentivement. Conseils d'utilastion et d'entretien (Partie 1) et les instructions de montage (Partie 2).

1-5 Part 1
Warnings!
Achtung!
Attention!

1-12 Part 1
Potential hazards
Potenzielle Gefahren
Dangers potentiels

1-7 Part 1
Installation notices
Installationsplanung
Planification de l'installation

1-14 Part 1
Assembly instructions
Montageanweisungen
Instructions de montage

1-7 Part 1
Safe play instructions
Sichere Spielanweisungen
Consignes de jeu sécurité

Customer service and support
Kundendienst und Unterstützung
Service clients et support

CONTACT

Frequently Asked Questions
Häufig gestellte Fragen
Foire aux questions
Veelgestelde Vragen

Contact form
Kontaktformular
Formulaire de contact
Contactformulier

EU +31 85 44 44 102
International phone charges may apply.
info@junglegym.com
www.junglegym.com
instagram.com/junglegymofficial

Availability:
Monday – Thursday:
CET 09:00 AM – 04:00 PM
Friday:
CET 09:00 AM – 01:00 PM

Manual ID: 040_075_2613

Design code: ZzsFCu, © 2025 Jungle Gym B.V. All rights reserved. Single-owner licensed. No part of this document may be reproduced or utilized otherwise in any form or by any means, electronic or mechanical, including photocopying or posting on the internet or an intranet—copying and networking prohibited.

040_401_2715_TP_Part_2 P2 20250526

Preparatory work
Vorbereitende Arbeiten
Travaux préparatoires

Overview of the total delivery scope
Übersicht über den gesamten Lieferumfang
Aperçu de l'ensemble de la portée de livraison

OR

To avoid danger of suffocation, please keep the bag away from children.
Um Erstickungsgefahr zu vermeiden, halten Sie die Tüte bitte von Kindern fern.
Pour éviter tout risque d'étouffement, gardez le sac hors de portée des enfants.

Choking hazard – may not be suitable for children under 3 years.
Erstickungsgefahr – möglicherweise nicht geeignet für Kinder unter 3 Jahren.
Risque d'étouffement – peut ne pas convenir aux enfants de moins de 3 ans.

#	Sub-assembly ID	Description	FFC ID
1	BT03a	Base Tower 80_220220_125	790_003
1	ET01a	Extension Tower 80_200_125	790_101
1	RF03a	Roof Canvas Tipi 80	790_203
1	BL01a	Balustrade 80_ U	790_301
2	BL02a	Balustrade 80_ T	790_301
1	RW01a	Rock wall 80_125 U	790_401
1	TS02a	TwoStep Ladder 80_125 T	790_411
1	SL01a	Slide Frame 80_125 U	790_901
1	AC01a	Accessories Set	194_119
1	Wavy Star Slide XL	324_x00	324_x00

Manual ID: 040_075_2613

Design code: ZzsFCu, © 2025 Jungle Gym B.V. All rights reserved. Single-owner licensed. No part of this document may be reproduced or utilized otherwise in any form or by any means, electronic or mechanical, including photocopying or posting on the internet or an intranet—copying and networking prohibited.

Identifying and inventorying of the individual timber parts
Identifizierung und inventarisieren der der einzelnen Holzteile
Identification et inventorier les pièces en bois individuels

A

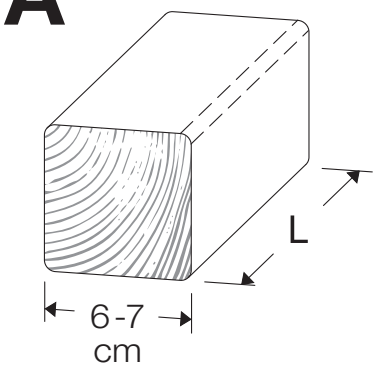

ID	L	#
A123	122 cm - 123 cm	1
A200	199 cm - 200 cm	2
A220	219 cm - 220 cm	4

C

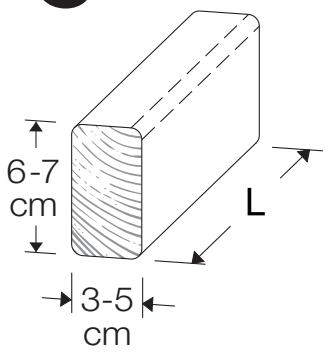

C74	73 cm - 74 cm	14

D

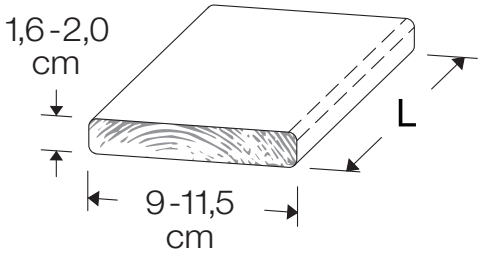

D56	53,5 cm - 56 cm	2
D60	59 cm - 60 cm	19
D65	64 cm - 65 cm	12
D74	73 cm - 74 cm	25

Manual ID: 040_075_2613

Design code: ZzsFCu, © 2025 Jungle Gym B.V. All rights reserved. Single-owner licensed. No part of this document may be reproduced or utilized otherwise in any form or by any means, electronic or mechanical, including photocopying or posting on the internet or an intranet—copying and networking prohibited.

Identification, inventorying, and registering of the individual accessories and parts
Identifizierung, inventarisieren und registrieren von der einzelnen Zubehör und Teilen
Identification, inventorier et enregistrer les accessoires et pièces individuels

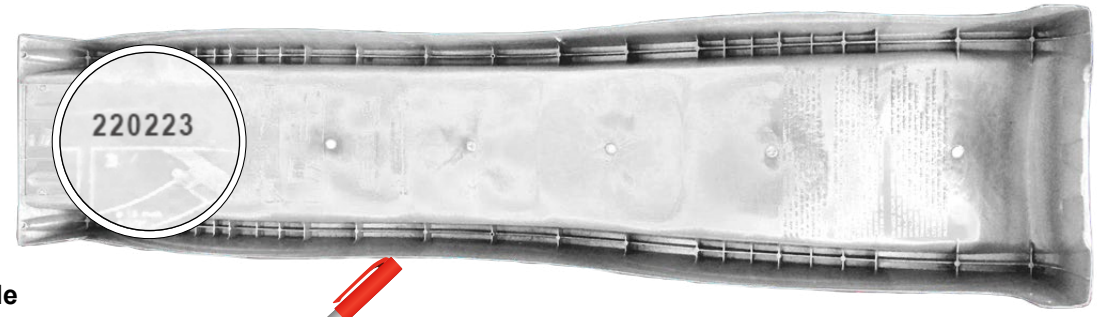

Example

№: **LOT ID:**

2 2 _ 0 2 2 3

	№	LOT ID		№	LOT ID
1.			3.		
2.			4.		

Identification, inventorying, and registering of the individual assembly kits
Identifizierung, inventarisieren und registrieren der der einzelnen Bausätze
Identification, inventorier et enregistrer les kits de construction individuels

№: + **LOT ID:**

Example

№: **LOT ID:**

1 2 3 _ 4 5 6 _ 2 7 1 1

	№	LOT ID		№	LOT ID
1.			6.		
2.			7.		
3.			8.		
4.			9.		
5.			10.		

Manual ID: 040_075_2613

Design code: ZzsFCu, © 2025 Jungle Gym B.V. All rights reserved. Single-owner licensed. No part of this document may be reproduced or utilized otherwise in any form or by any means, electronic or mechanical, including photocopying or posting on the internet or an intranet—copying and networking prohibited.

Identification, inventorying, and registering of the individual assembly packs
Identifizierung, inventarisieren und registrieren der einzelnen Baupakete
Identification, inventorier et enregistrer les packs de construction individuels

Example

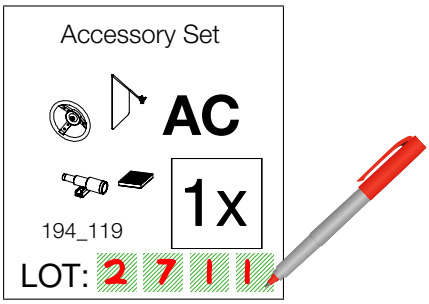

Rock Wall 80 **RW** 194_105 1x **LOT:**	Hardware 01 **H01** 194_101 3x **LOT:**	Accessory Set **AC** 194_119 1x **LOT:**	Tower 80 **BT** **ET** 194_100 2x **LOT:**	Roof Canvas Gable & Tipi 80 **RF** 194_108 1x **LOT:**
Canvas 136 x 74cm 73.5 cm 123_220 1x **LOT:**	Slide XL 2.2m 324_x00 1x **LOT:**	Slide Frame **SL** 194_107 1x **LOT:**	Two Step Ladder **TS** **(LA)** 194_102 1x **LOT:**	

Manual ID: 040_075_2613

Design code: ZzsFCu, © 2025 Jungle Gym B.V. All rights reserved. Single-owner licensed. No part of this document may be reproduced or utilized otherwise in any form or by any means, electronic or mechanical, including photocopying or posting on the internet or an intranet—copying and networking prohibited.

Overview of the contents of the standard included start package
Übersicht über den Inhalt des standardmäßig enthaltenen Startpakets
Aperçu du contenu du pack de démarrage inclus standard

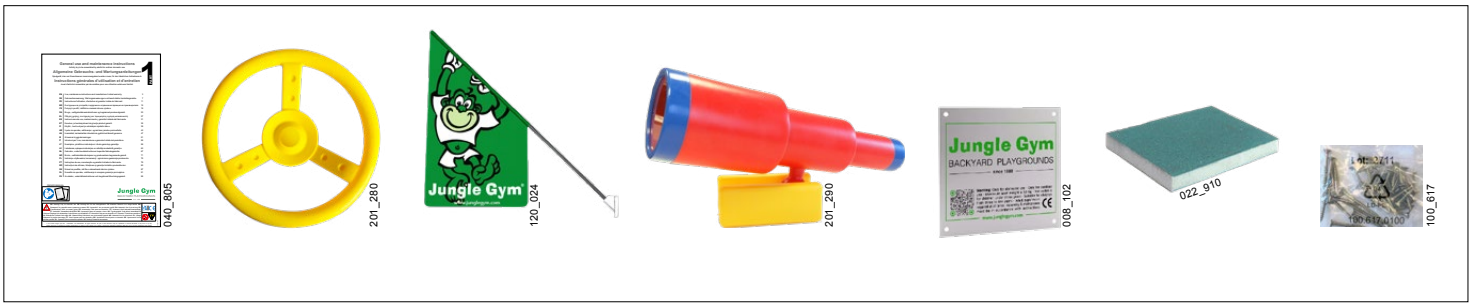

194_119

Overview of the bit and drill bit references
Übersicht über die Bit- und Bohrer-Referenzen
Aperçu des références des embouts et des forêts

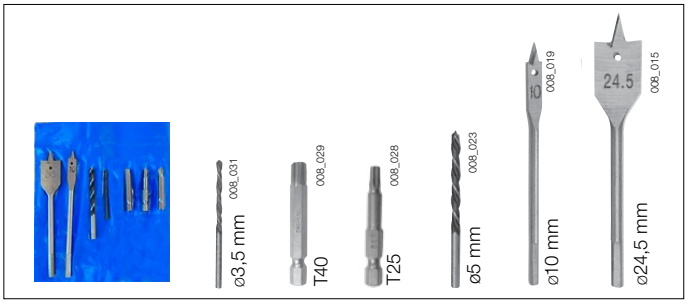

104_107

Overview of all hardware and part references for identification
Übersicht über alle Hardware- und Teile-Referenzen zur Identifizierung
Aperçu de toutes les références de matériel et de pièces pour identification

		#	L
ø 5 T-40	ø 8.0 mm L JG 8.8	001_404 001_406 001_411 001_417 001_422	30 mm 45 mm 60 mm 80 mm 137 mm
ø10 T-40	M8 L JG 8.8	001_102	30 mm
	ø 2.0 mm L	000_101	20 mm
ø3.5 T-25	ø 6.3 mm L	002_036	16 mm
ø3.5 PH-2	ø 4.5 mm L	002_041	20 mm
PH-2	ø 3.5 mm L	002_042	13 mm
PH-2	ø 3.9 mm L	002_301	40 mm

		#	L
ø3.5 T-25	ø 5.0 mm L	002_308 002_219 002_220 002_223	20 mm 30 mm 45 mm 80 mm
ø10	L M8	004_050	22mm
	M8	003_010	
	M6	003_034	
		022_845 022_846 022_847 022_848	Yellow Blue Green Red
		023_031	White
	022_844 022_314	120_005	White

Manual ID: 040_075_2613

output: 27/06/24

Design code: ZzsFCu, © 2025 Jungle Gym B.V. All rights reserved. Single-owner licensed. No part of this document may be reproduced or utilized otherwise in any form or by any means, electronic or mechanical, including photocopying or posting on the internet or an intranet—copying and networking prohibited.

Complete climbing frame identification and registration
Identifizierung und Registrierung des kompletten Klettergerüsts
Identification et enregistrement de la structure d’escalade complète

Your Design Code
Ihr Designcode
Votre code de design

Complete climbing frame identification
Identifizierung des kompletten Klettergerüsts
Identification de la structure d’escalade complète

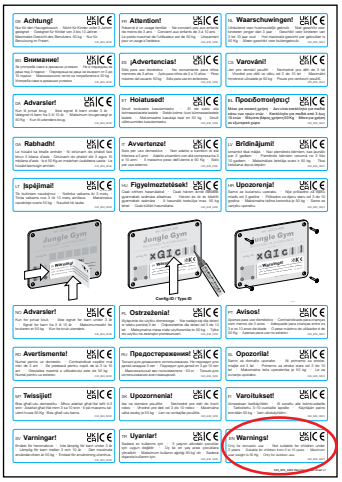

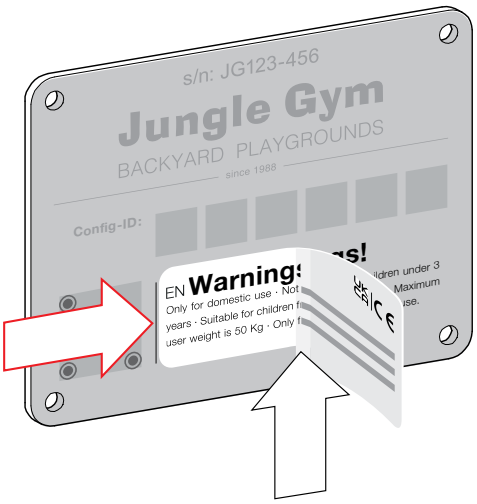

Manual ID: 040_075_2613

Required tools and materials
Benötigtes Werkzeug und Materialien
Outils et matériaux nécessaires

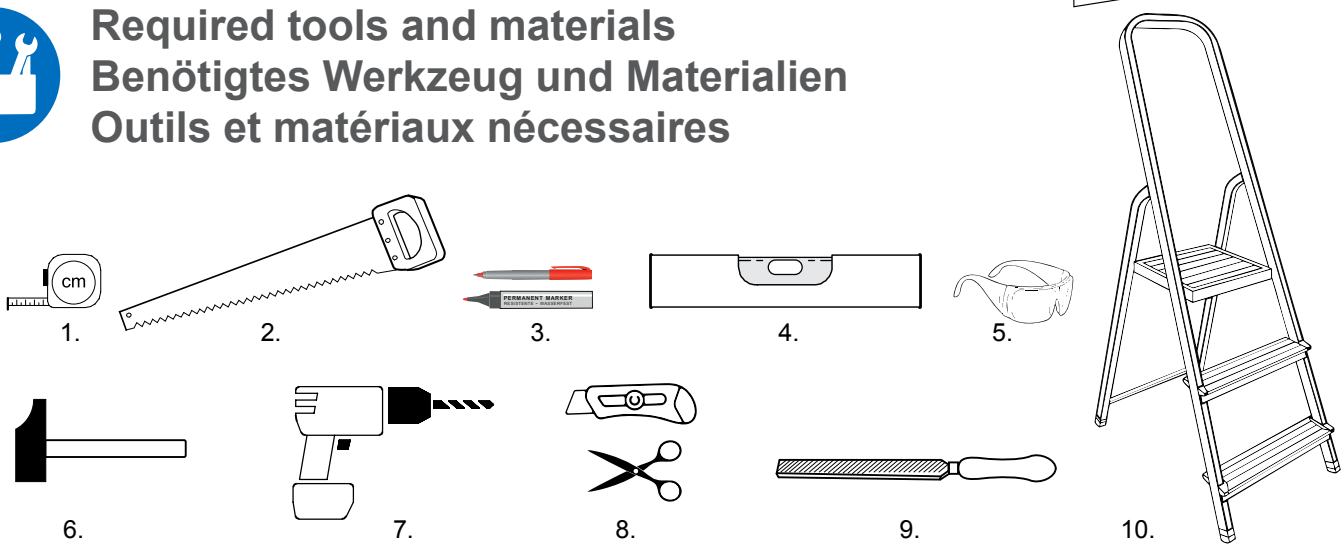

Design code: ZzsFCu, © 2025 Jungle Gym B.V. All rights reserved. Single-owner licensed. No part of this document may be reproduced or utilized otherwise in any form or by any means, electronic or mechanical, including photocopying or posting on the internet or an intranet—copying and networking prohibited.

040_401_2715_TP_Part_2 P8 20250526

Installation and safety notices
Installationsplannung und Sicherheitshinweise
Planification de l'installation et avis de securité

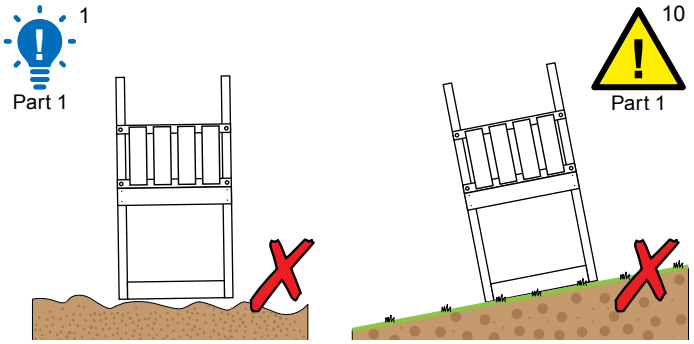

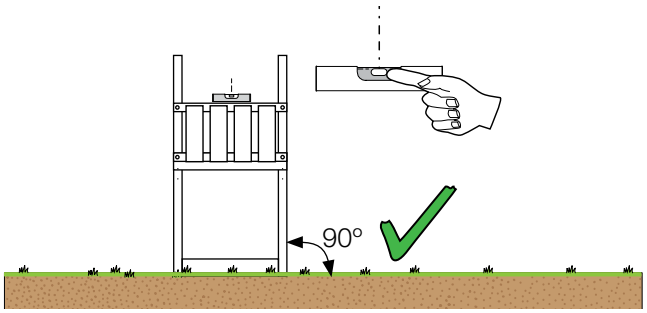

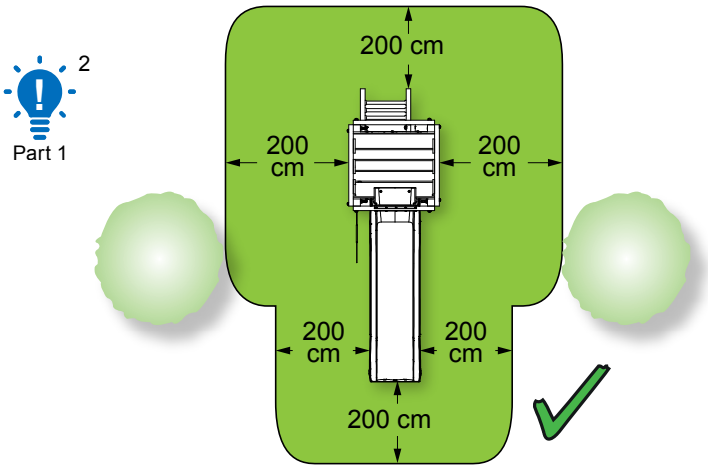

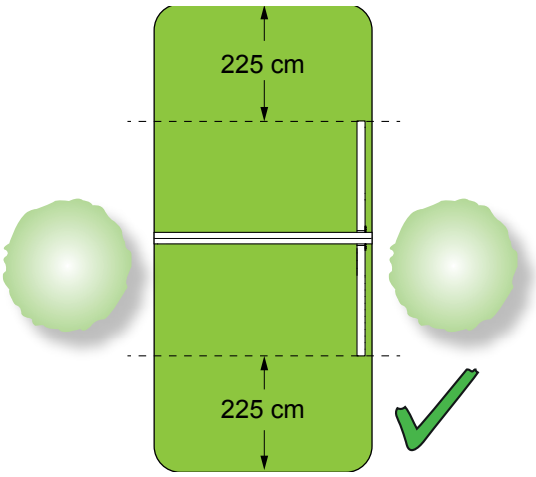

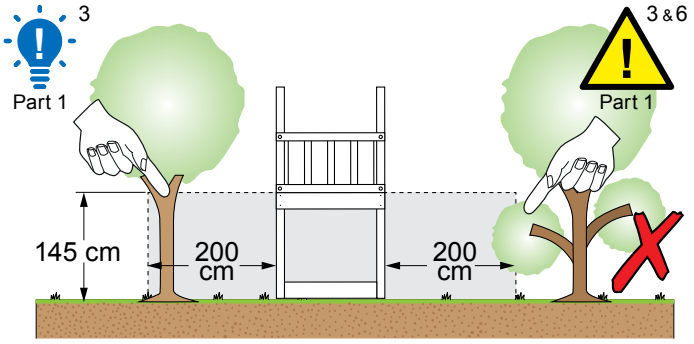

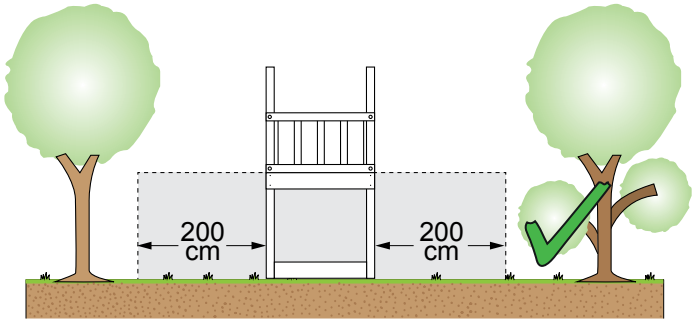

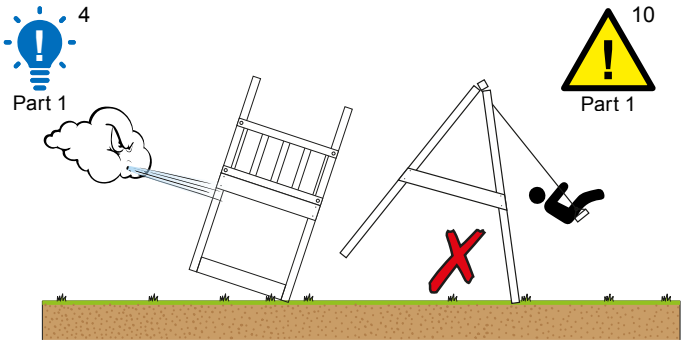

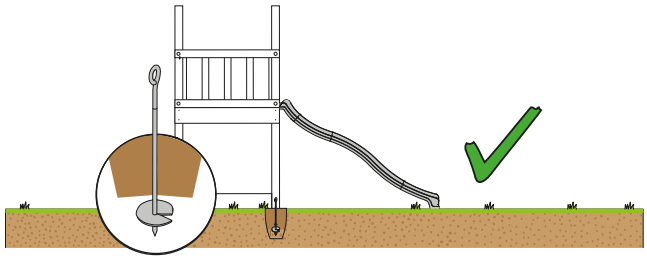

Manual ID: 040_075_2613

Design code: ZzsFCu, © 2025 Jungle Gym B.V. All rights reserved. Single-owner licensed. No part of this document may be reproduced or utilized otherwise in any form or by any means, electronic or mechanical, including photocopying or posting on the internet or an intranet—copying and networking prohibited.

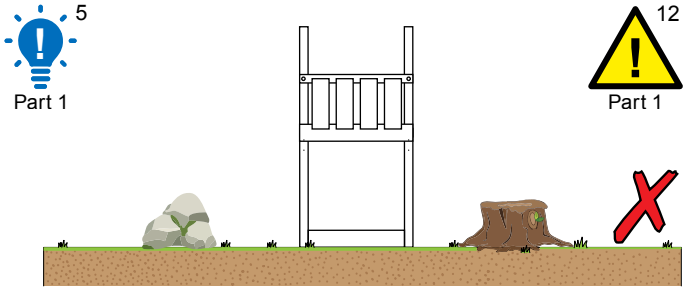

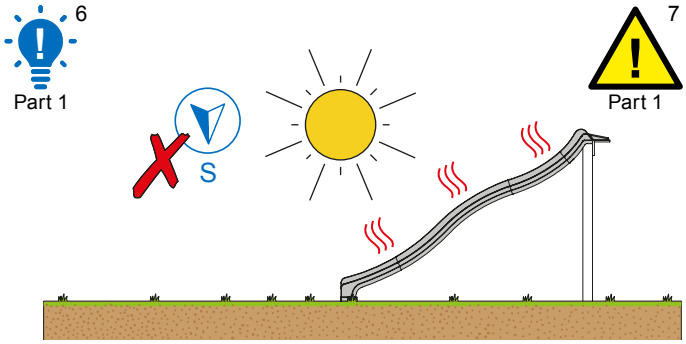

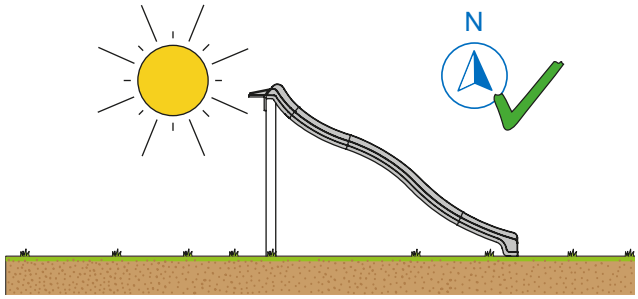

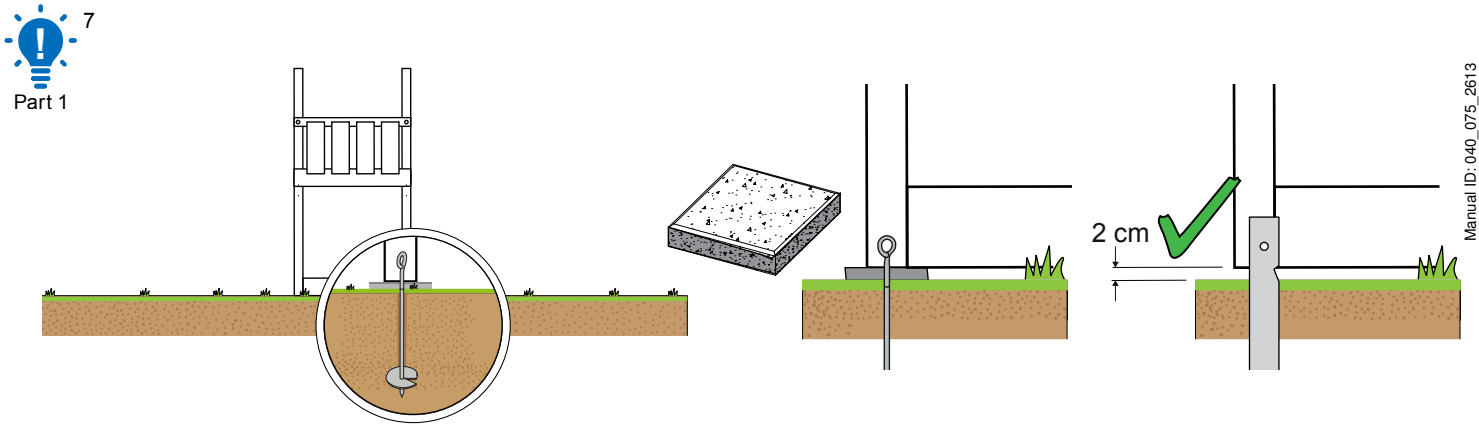

Manual ID: 040_075_2613

Shock absorbing surfaces
Stoßdämpfende Oberflachen
Surfaces d'absorption des chocs

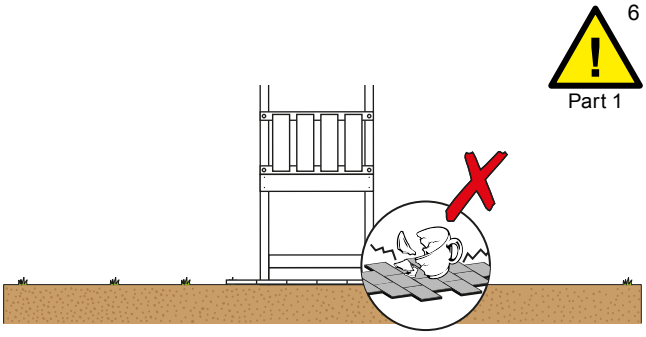

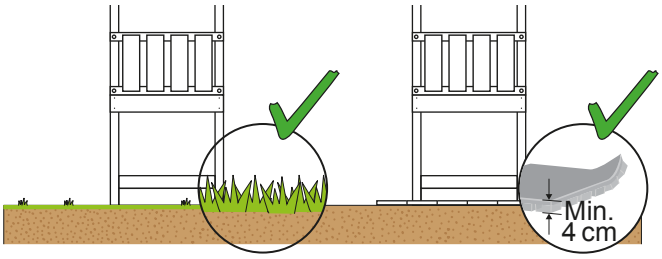

Design code: ZzsFCu, © 2025 Jungle Gym B.V. All rights reserved. Single-owner licensed. No part of this document may be reproduced or utilized otherwise in any form or by any means, electronic or mechanical, including photocopying or posting on the internet or an intranet—copying and networking prohibited.

Assembly instructions and safety notices
Montageanweisungen und Sicherheitswarnungen
Instructions de montage et avis de securité

1,2,3&4
Part 1

1
Part 1

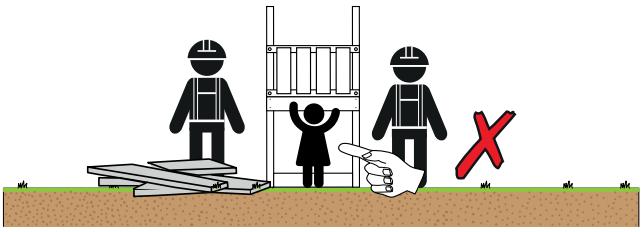

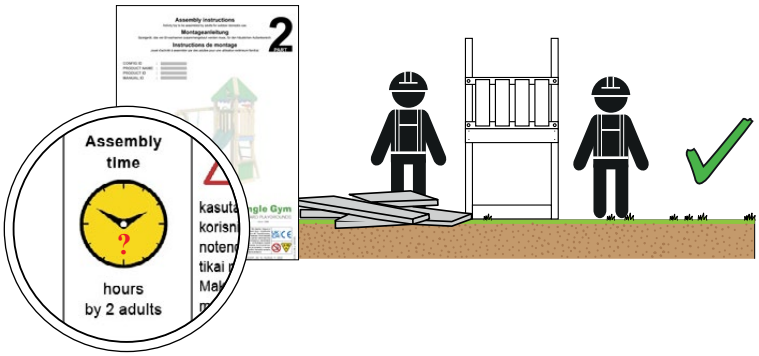

6
Part 1

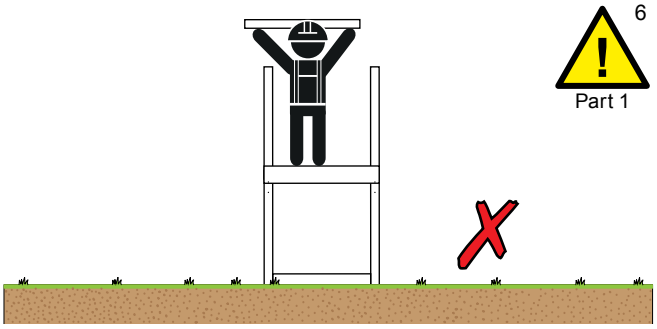

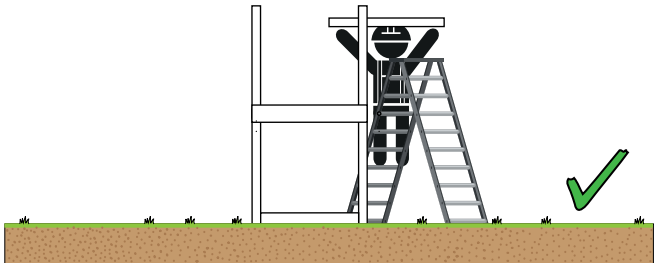

Manual ID: 040_075_2613

5
Part 1

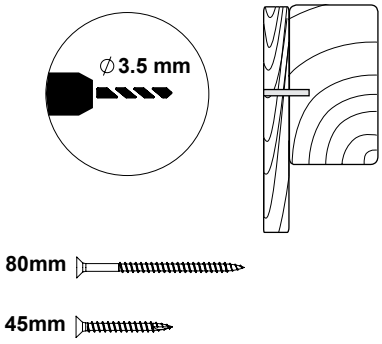

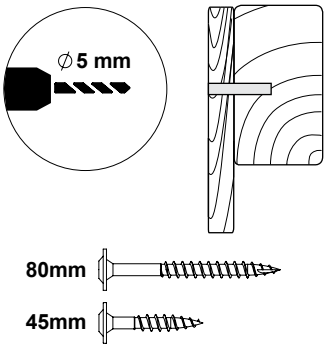

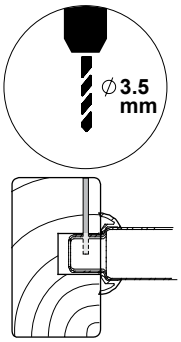

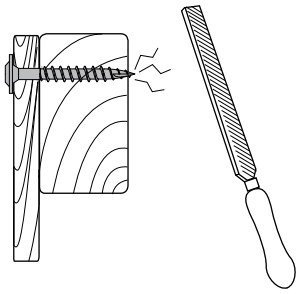

Design code: ZzsFCu, © 2025 Jungle Gym B.V. All rights reserved. Single-owner licensed. No part of this document may be reproduced or utilized otherwise in any form or by any means, electronic or mechanical, including photocopying or posting on the internet or an intranet—copying and networking prohibited.

6 Part 1

5&9 Part 1

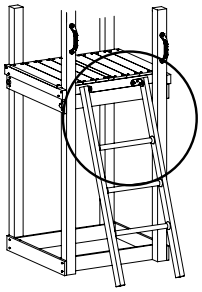

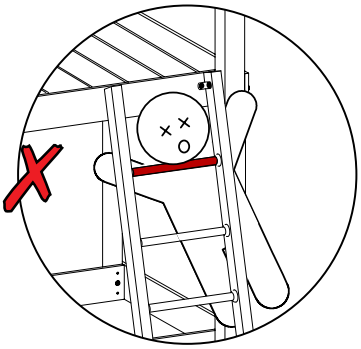

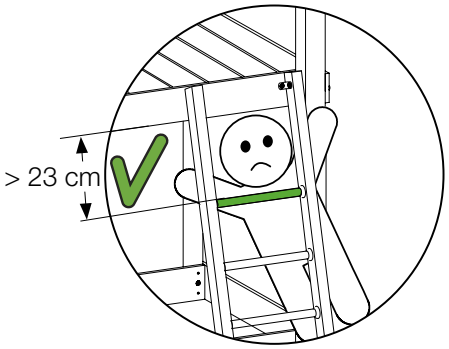

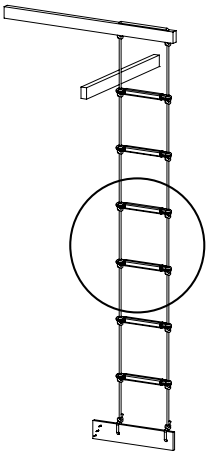

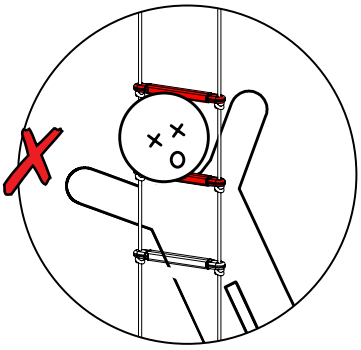

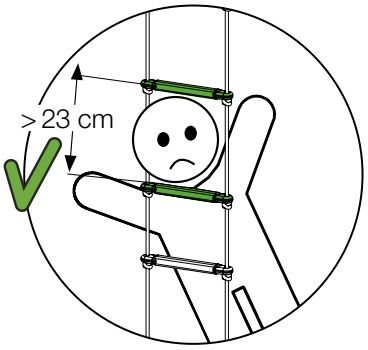

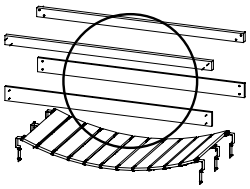

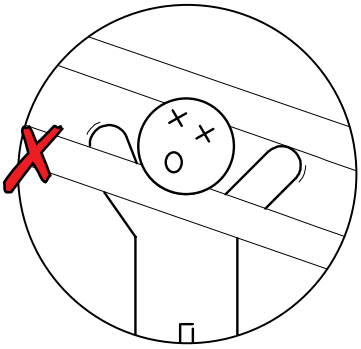

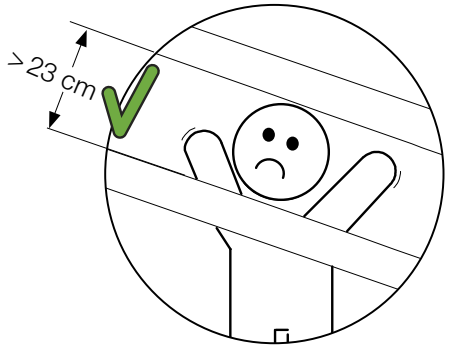

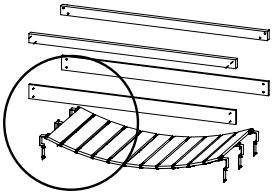

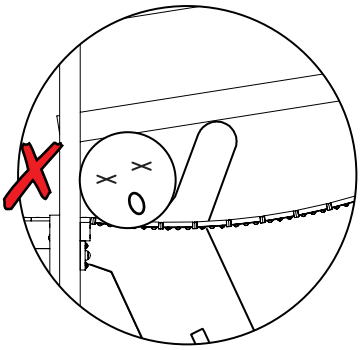

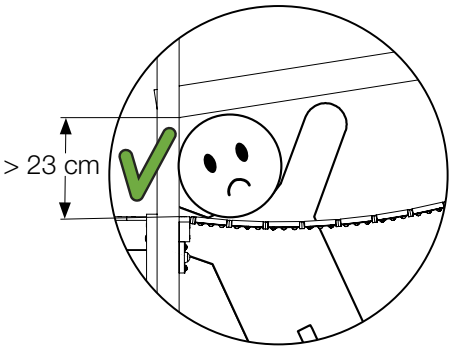

Manual ID: 040_075_2613

Design code: ZzsFCu, © 2025 Jungle Gym B.V. All rights reserved. Single-owner licensed. No part of this document may be reproduced or utilized otherwise in any form or by any means, electronic or mechanical, including photocopying or posting on the internet or an intranet—copying and networking prohibited.

8&9 Part 1

9 Part 1

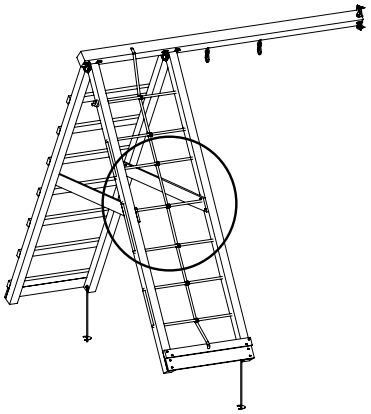

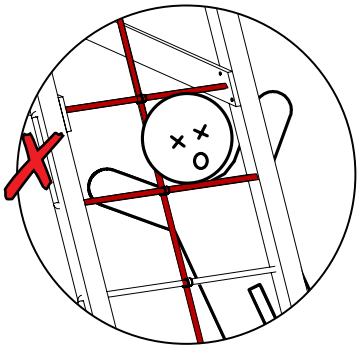

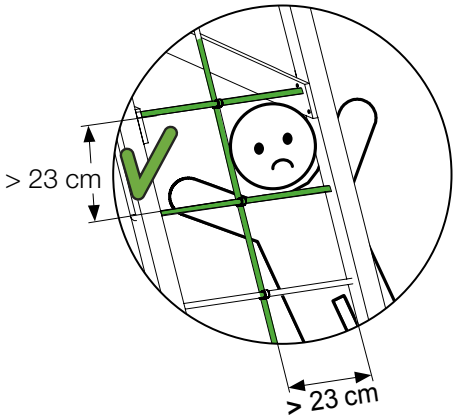

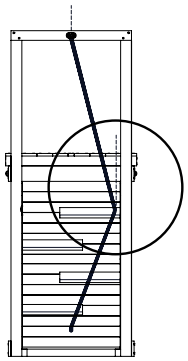

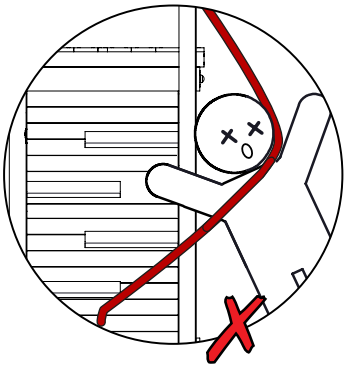

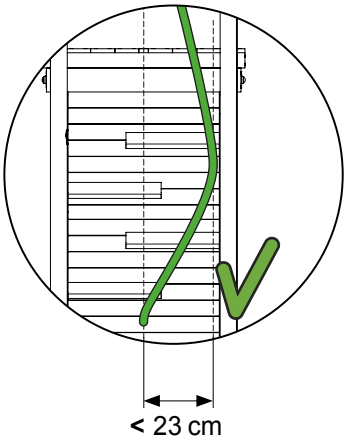

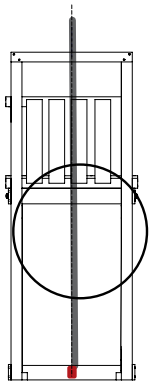

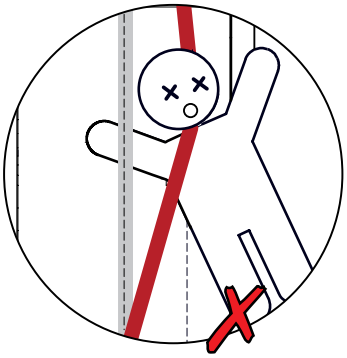

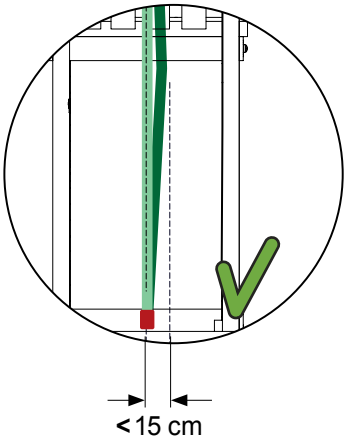

8&9 Part 1

3 Part 1

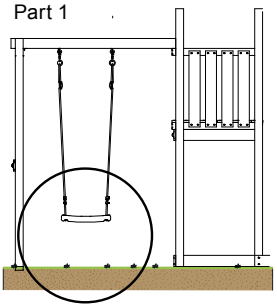

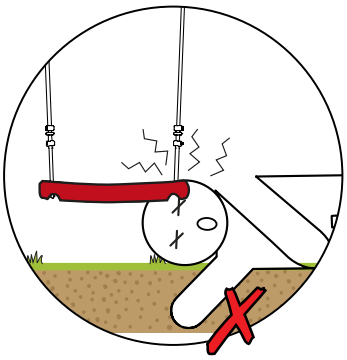

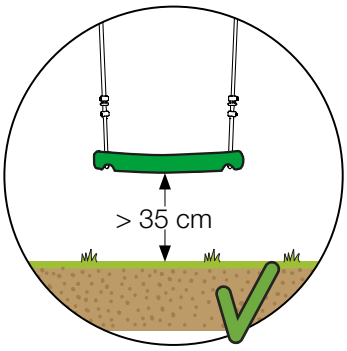

Manual ID: 040_075_2613

Design code: ZzsFCu, © 2025 Jungle Gym B.V. All rights reserved. Single-owner licensed. No part of this document may be reproduced or utilized otherwise in any form or by any means, electronic or mechanical, including photocopying or posting on the internet or an intranet—copying and networking prohibited.

10 Part 1

4&9 Part 1

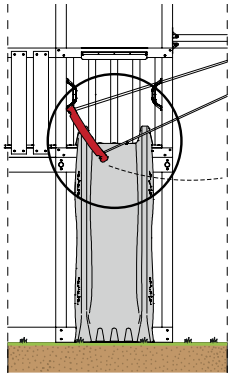

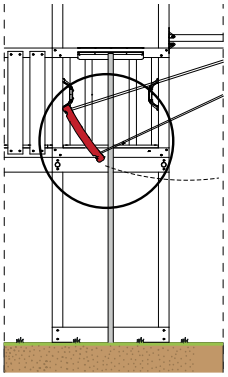

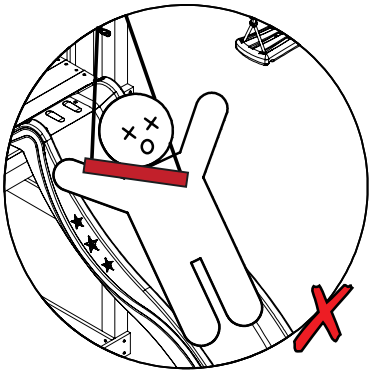

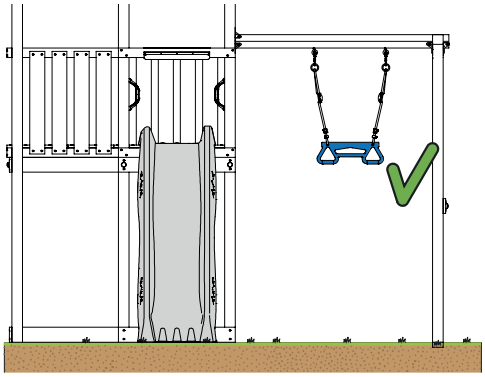

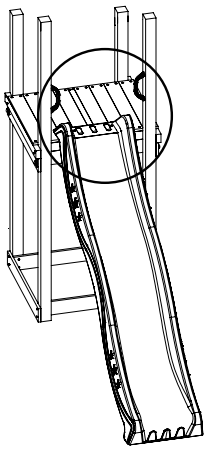

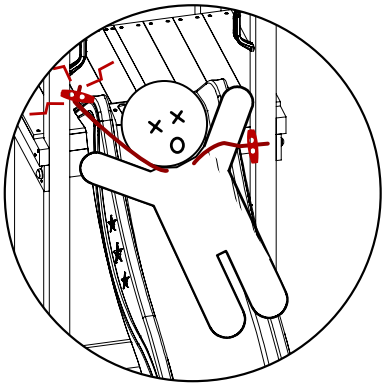

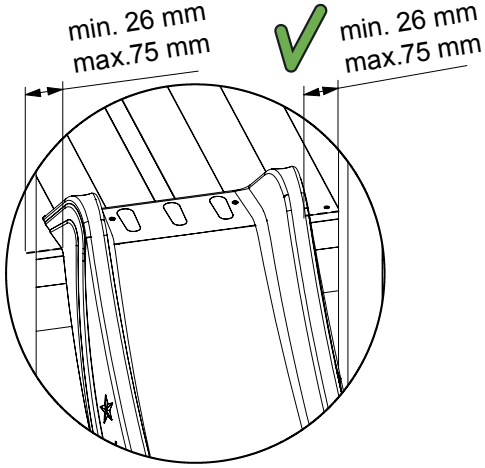

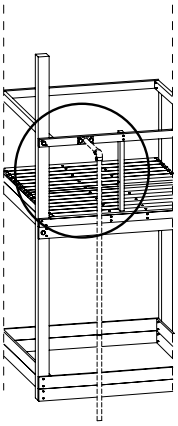

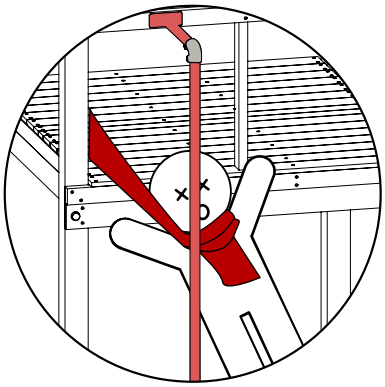

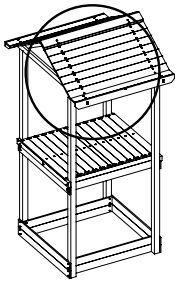

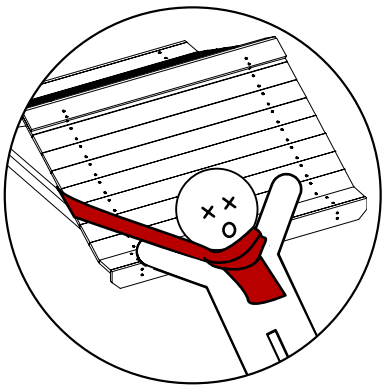

Manual ID: 040_075_2613

Design code: ZzsFCu, © 2025 Jungle Gym B.V. All rights reserved. Single-owner licensed. No part of this document may be reproduced or utilized otherwise in any form or by any means, electronic or mechanical, including photocopying or posting on the internet or an intranet—copying and networking prohibited.

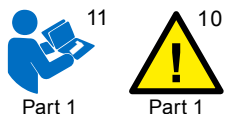

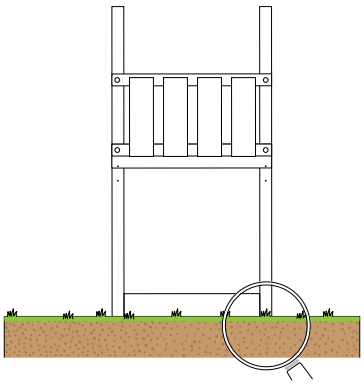

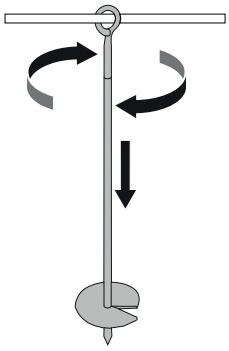

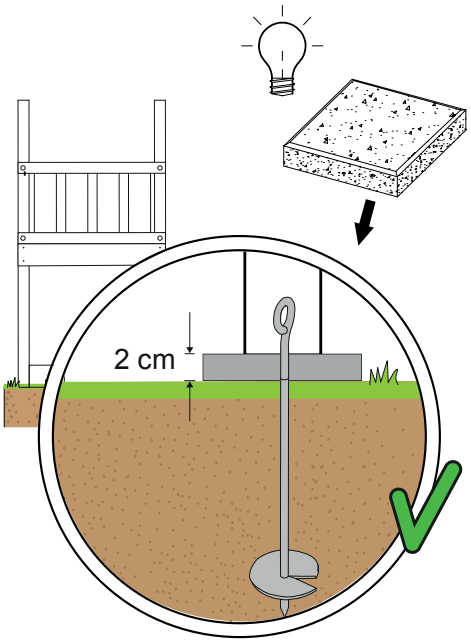

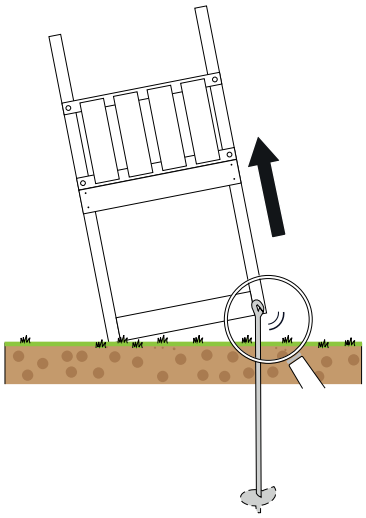

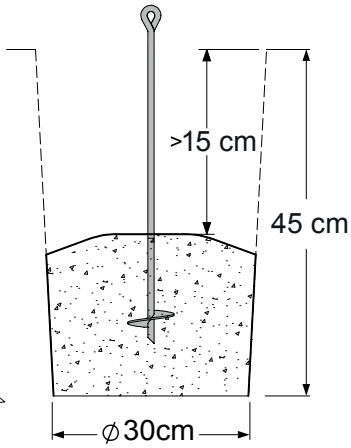

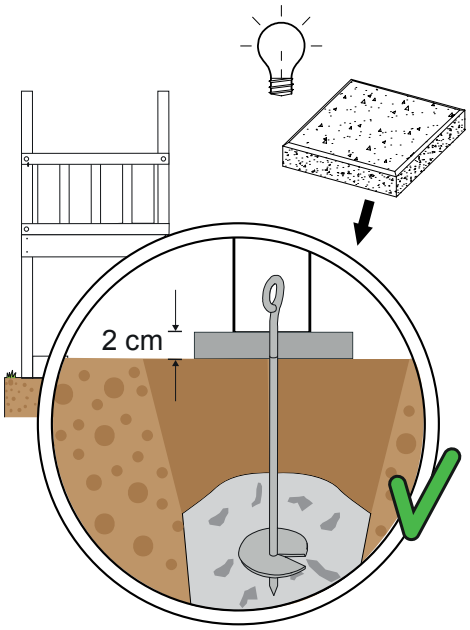

Optional: Post anchors

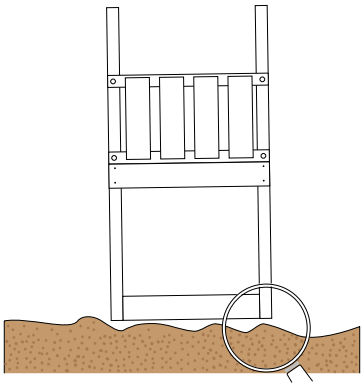

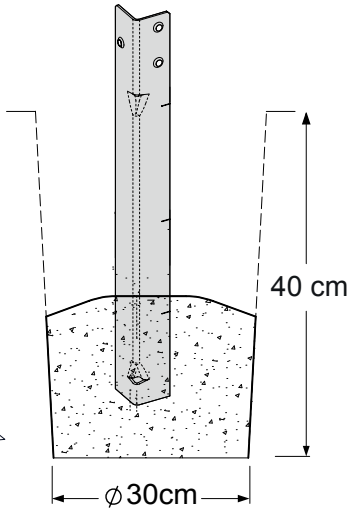

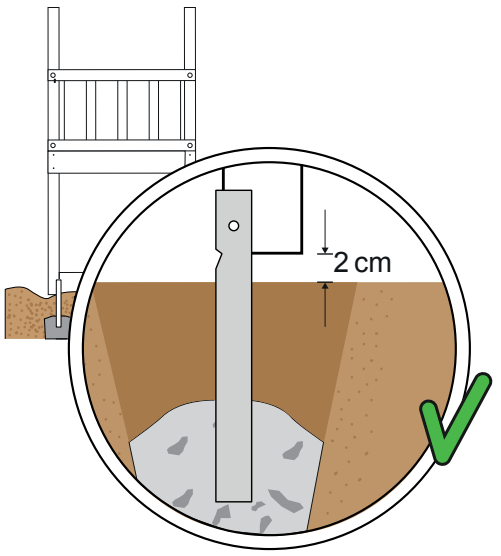

Manual ID: 040_075_2613

Design code: ZzsFCu, © 2025 Jungle Gym B.V. All rights reserved. Single-owner licensed. No part of this document may be reproduced or utilized otherwise in any form or by any means, electronic or mechanical, including photocopying or posting on the internet or an intranet—copying and networking prohibited.

Dimensions
Abmessungen
Dimensions

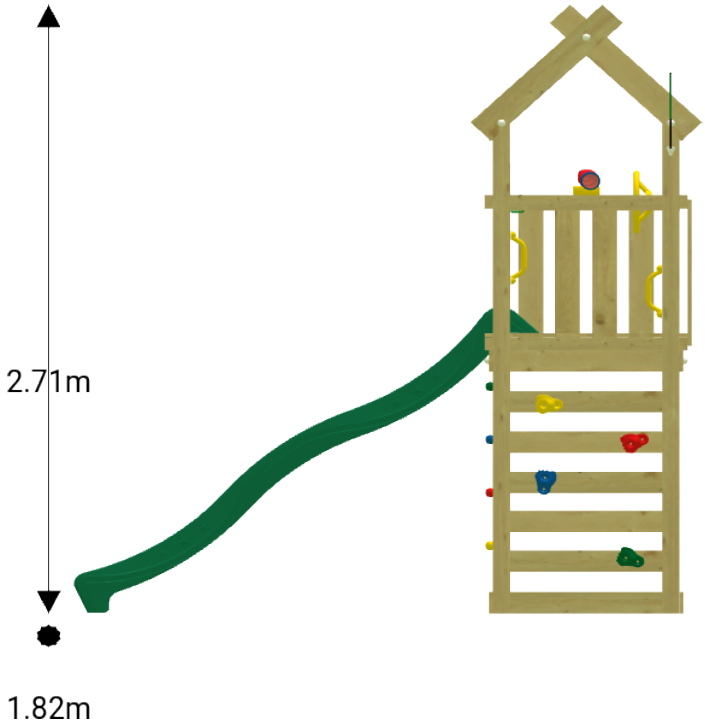

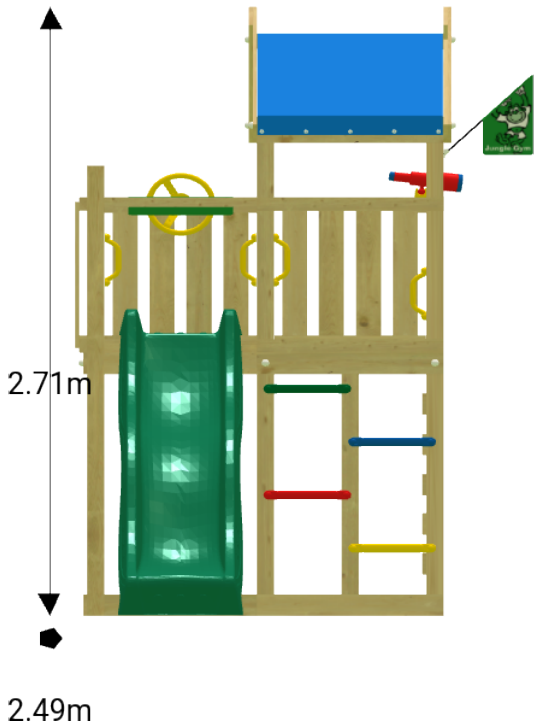

Manual ID: 040_075_2613

Design code: ZzsFCu, © 2025 Jungle Gym B.V. All rights reserved. Single-owner licensed. No part of this document may be reproduced or utilized otherwise in any form or by any means, electronic or mechanical, including photocopying or posting on the internet or an intranet—copying and networking prohibited.

Assembly sequence
Montagereihenfolge
Séquence d'assemblage

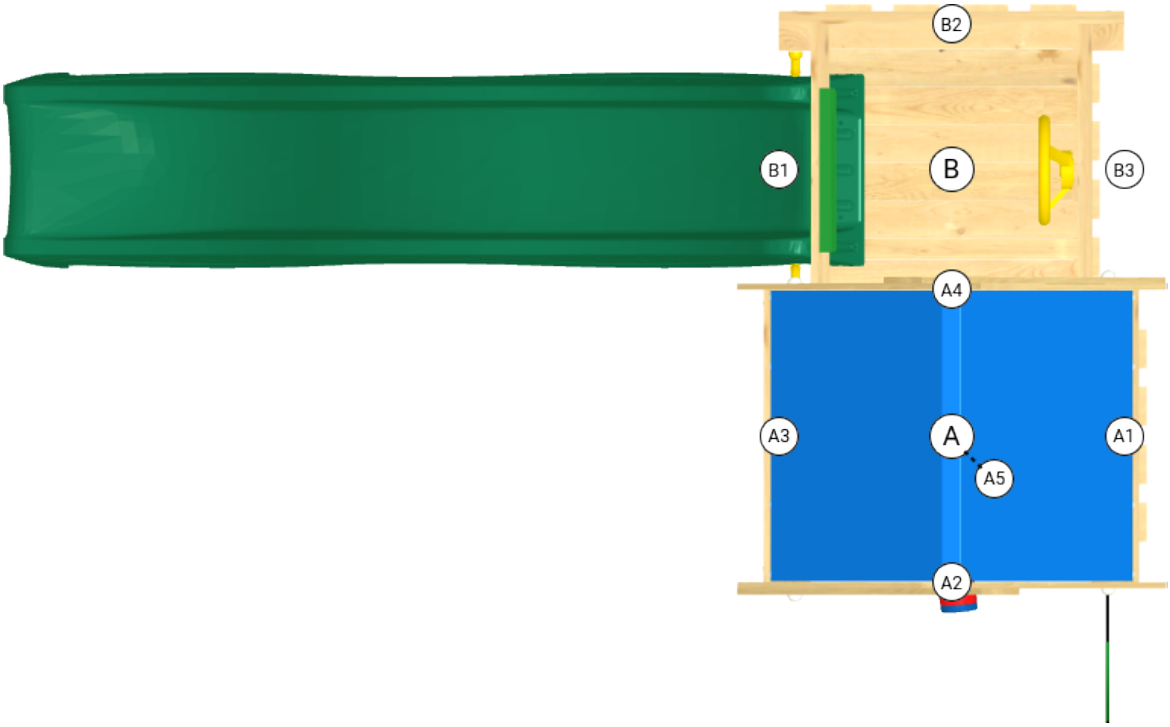

	ID			A	B
1	BT03a		p.18	✔	-
2	ET01a		p.20	-	✔
3	BL01a		p.22	-	B3
4	BL02a		p.23	A1	B2
5	RF03a		p.24	A5	-
6	TS02a		p.28	A3	-
7	RW01a		p.30	A2	-
8	SL01a		p.32	-	B1
9	GA		p.35	✔	✔
10	AC01a		p.37	A1	-

Manual ID: 040_075_2613

Design code: ZzsFCu, © 2025 Jungle Gym B.V. All rights reserved. Single-owner licensed. No part of this document may be reproduced or utilized otherwise in any form or by any means, electronic or mechanical, including photocopying or posting on the internet or an intranet—copying and networking prohibited.

1 BT03a: Base Tower 80 125cm 220220

Assembly Pack: 194_100

	PartNo	PartName	QTY.
Hardware + Parts	001_406	Stealth Screw 8x45	6
	002_220	Gap Point Screw T25 - 5x45	72
	002_223	Gap Point Screw T25 - 5x80	16
	007_001	Ground-anchor	2
	022_31x	bpc-base version 3	4
	022_84x	bpc cover	4
Timber	A220	Post ca.70x70 L2200	4
	C74	Beam 740 mm	4
	D60	Board 600 mm	10
	D74	Board 740 mm	8

Base Tower - P04 - BT03 - 12/09/2024 - v3.3

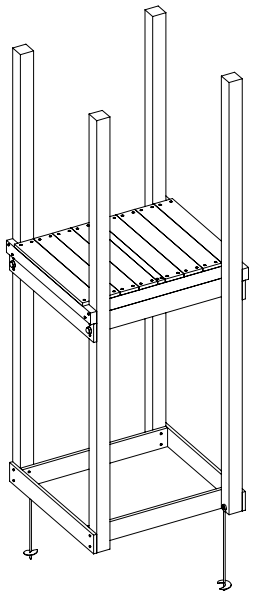

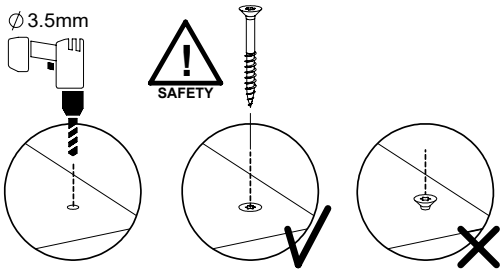

Manual ID: 040_075_2613

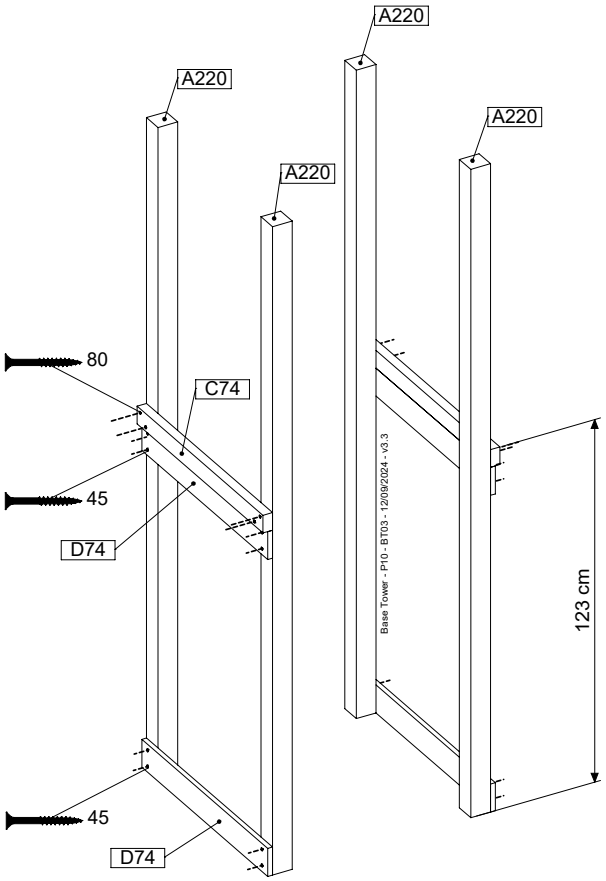

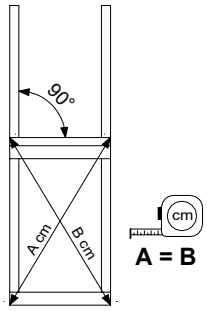

Design code: ZzsFCu, © 2025 Jungle Gym B.V. All rights reserved. Single-owner licensed. No part of this document may be reproduced or utilized otherwise in any form or by any means, electronic or mechanical, including photocopying or posting on the internet or an intranet—copying and networking prohibited.

1.1

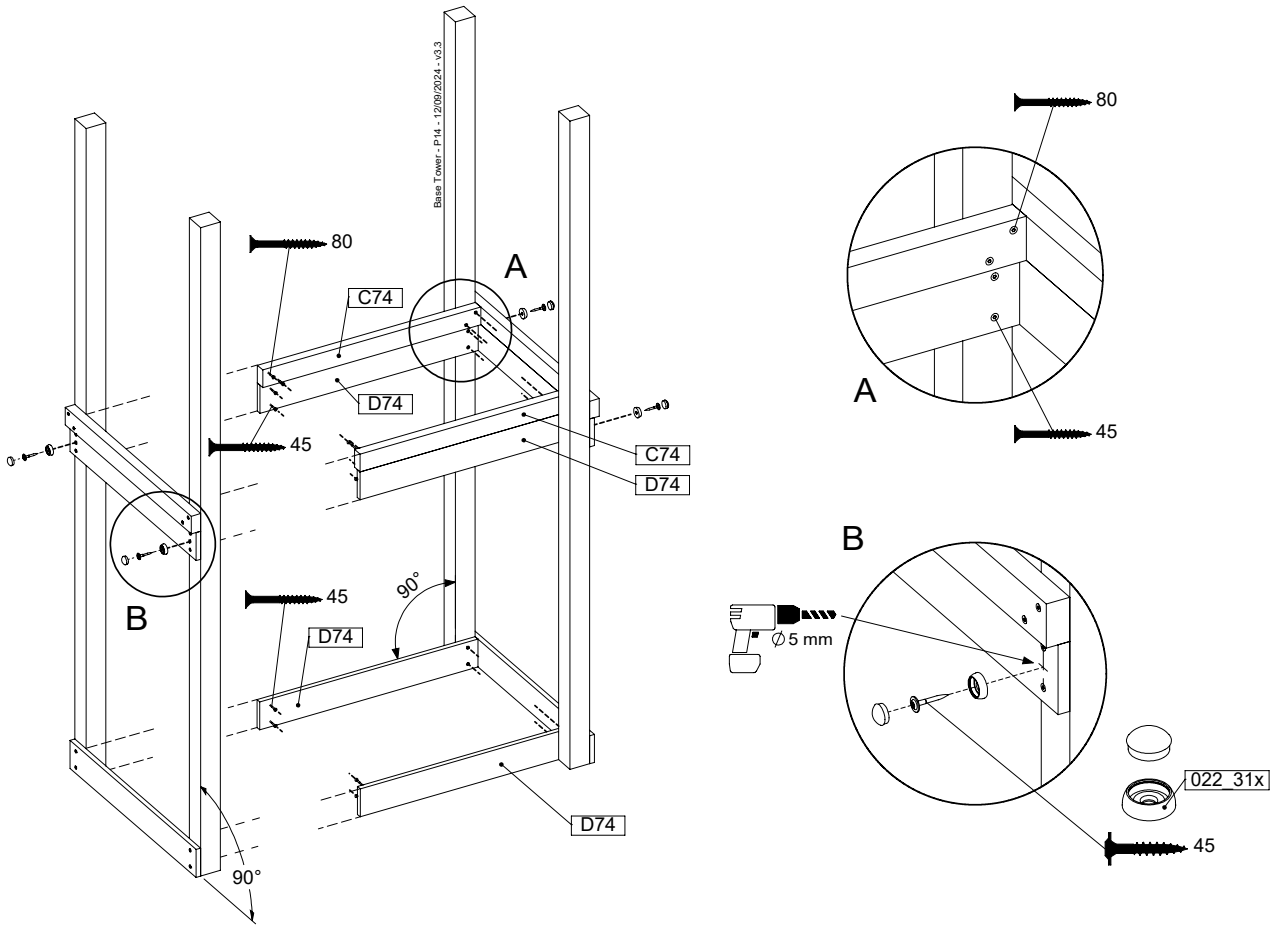

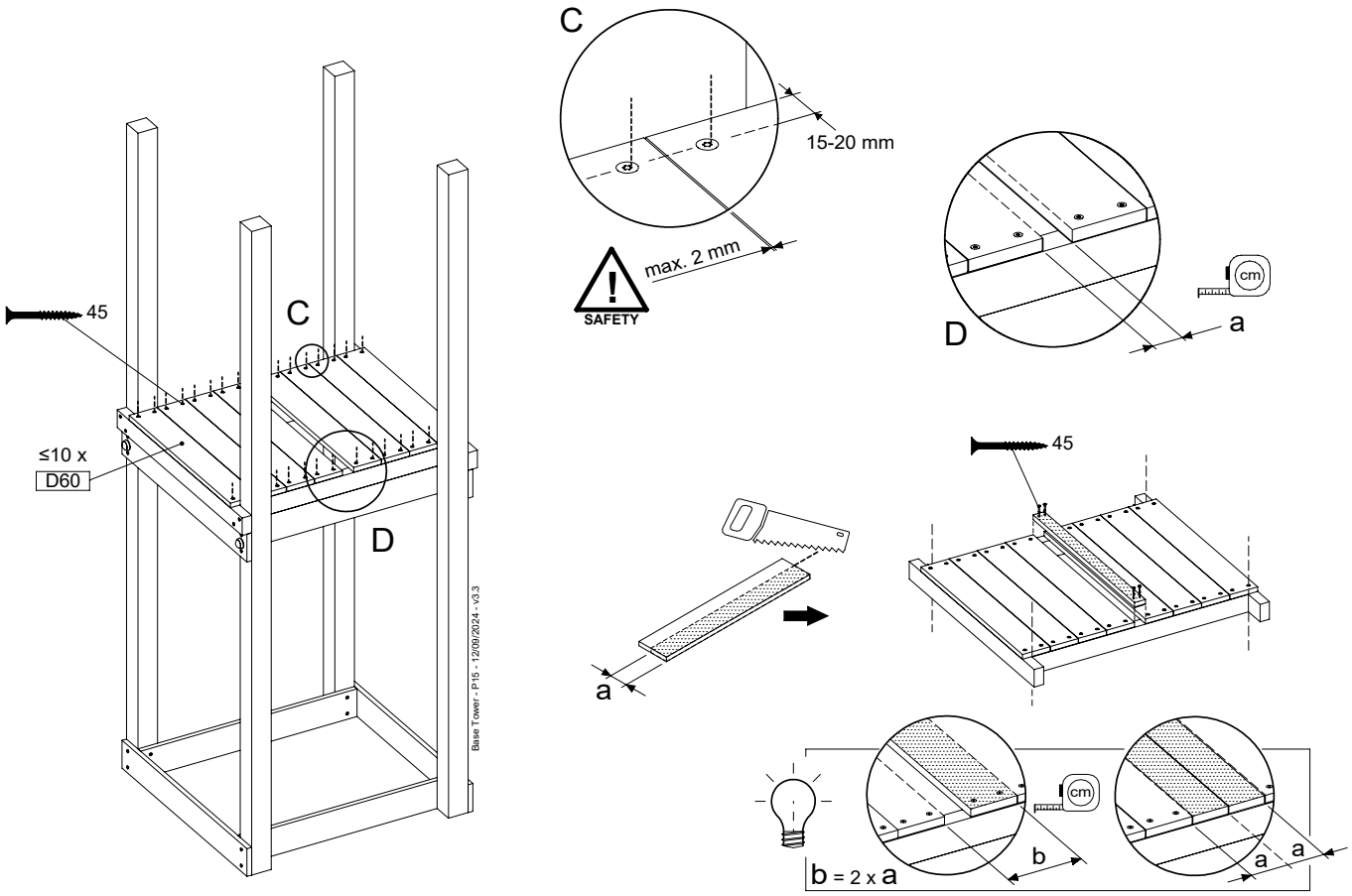

Manual ID: 040_075_2613

Design code: ZzsFCu, © 2025 Jungle Gym B.V. All rights reserved. Single-owner licensed. No part of this document may be reproduced or utilized otherwise in any form or by any means, electronic or mechanical, including photocopying or posting on the internet or an intranet—copying and networking prohibited.

2 ET01a: Extension Tower 80 200/125

(194_100)

	PartNo	PartName	QTY.
Hardware Pack 100_600	001_406	Stealth Screw 8x45	4
	002_220	Gap Point Screw T25 - 5x45	60
	002_223	Gap Point Screw T25 - 5x80	12
Other	007_001	Ground-anchor	2
Hardware Pack 100_600	022_31x	bpc-base version 3	2
	022_84x	bpc cover	2
Wood	A200	Post 70x70 L2000	2
	C74	Beam 740 mm	3
	D60	Board 600 mm	9
	D74	Board 740 mm	6

Extension Tower - P02 - ET01 - 18-12-2020 - v3.0

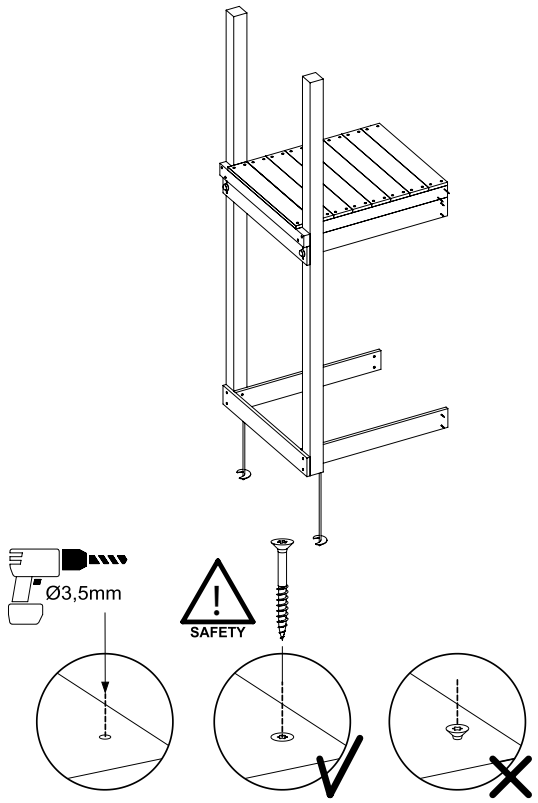

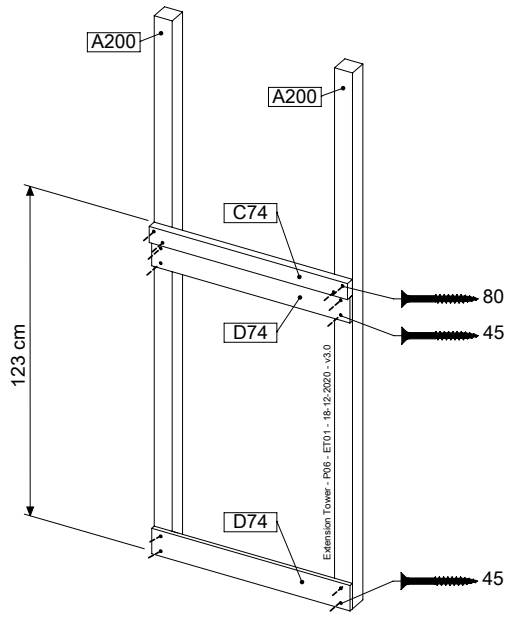

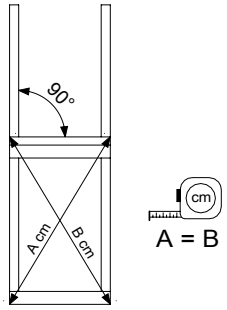

Manual ID: 040_075_2613

Design code: ZzsFCu, © 2025 Jungle Gym B.V. All rights reserved. Single-owner licensed. No part of this document may be reproduced or utilized otherwise in any form or by any means, electronic or mechanical, including photocopying or posting on the internet or an intranet—copying and networking prohibited.

2.1

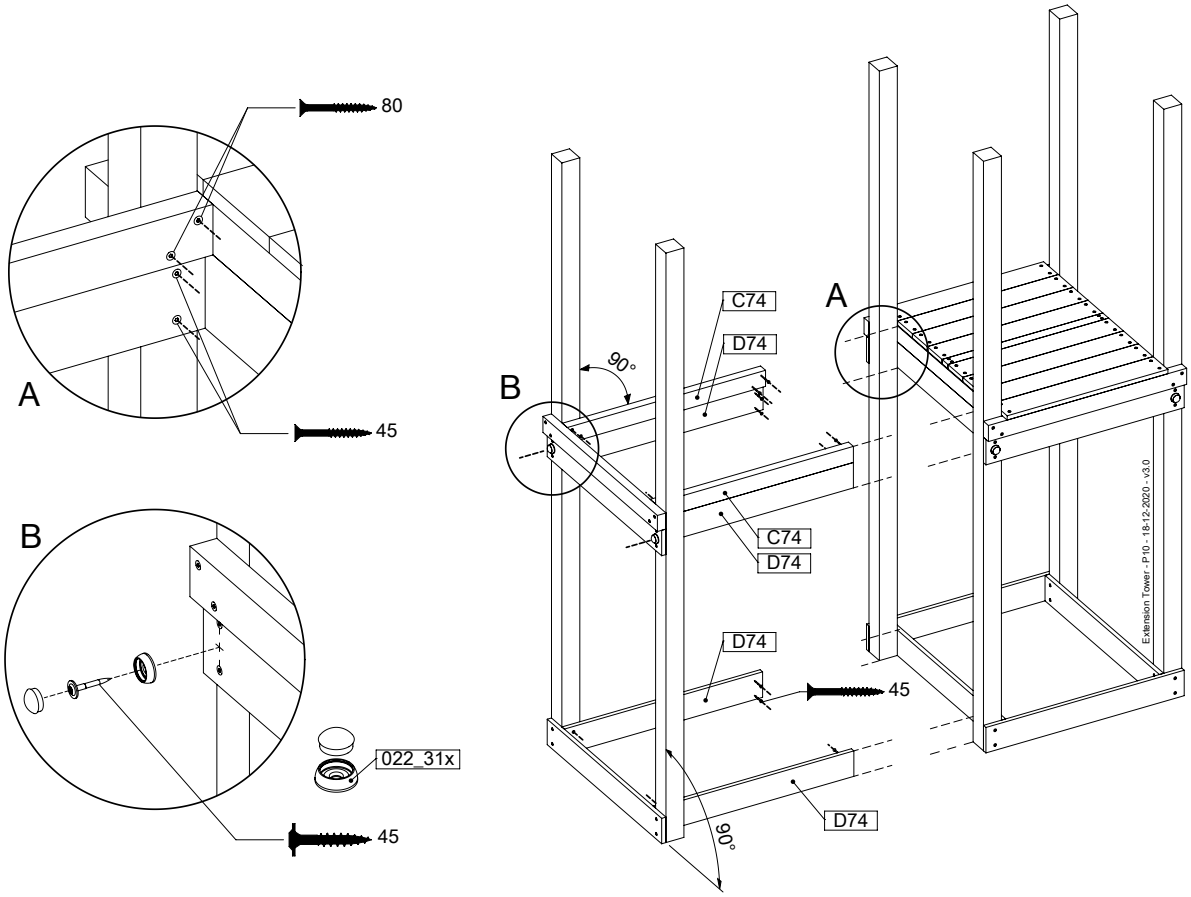

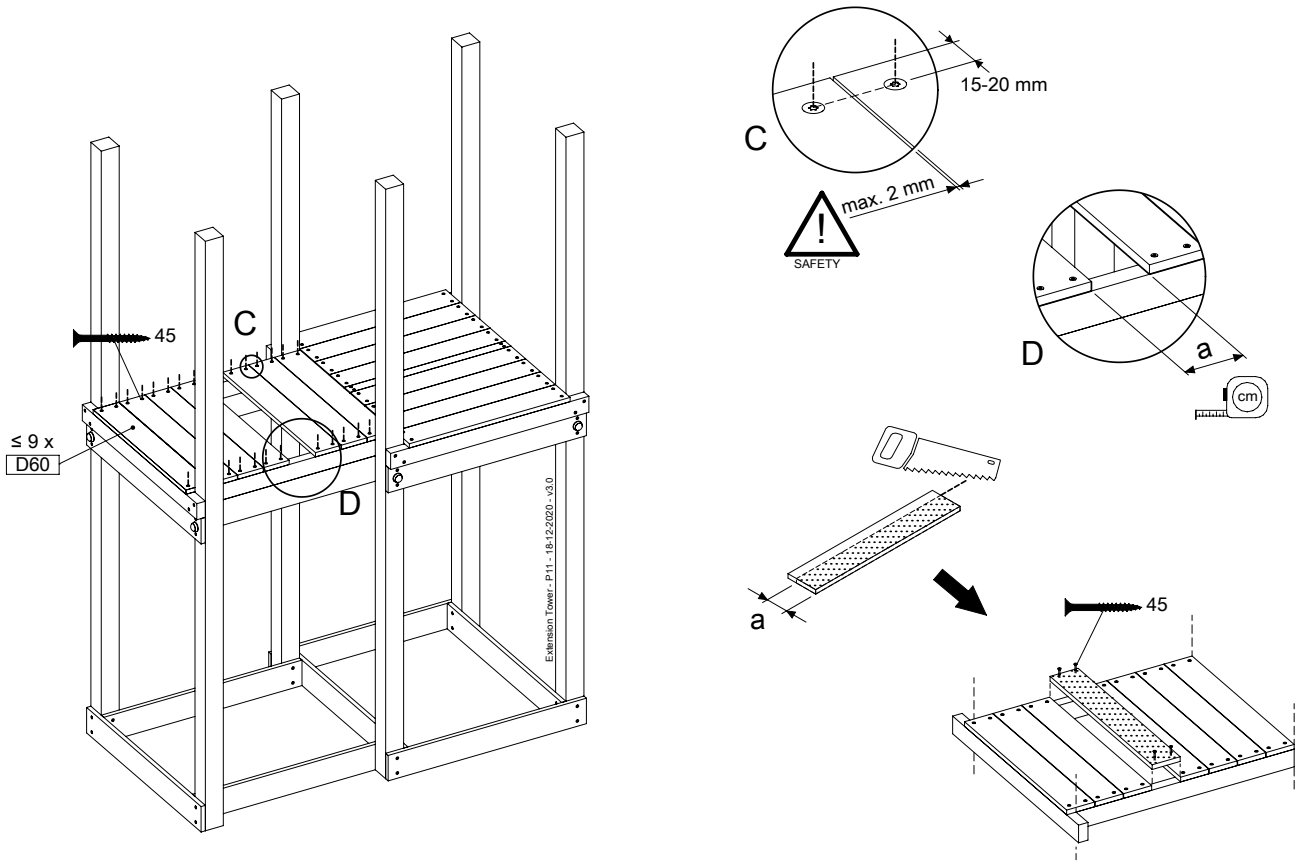

Manual ID: 040_075_2613

Design code: ZzsFCu, © 2025 Jungle Gym B.V. All rights reserved. Single-owner licensed. No part of this document may be reproduced or utilized otherwise in any form or by any means, electronic or mechanical, including photocopying or posting on the internet or an intranet—copying and networking prohibited.

3 BL01a: Balustrade 80 U - 7x7 posts

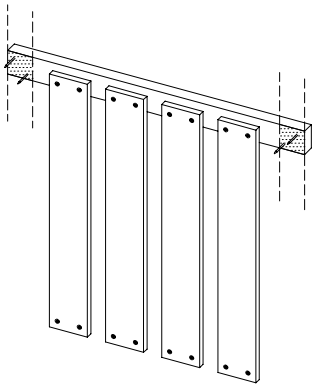

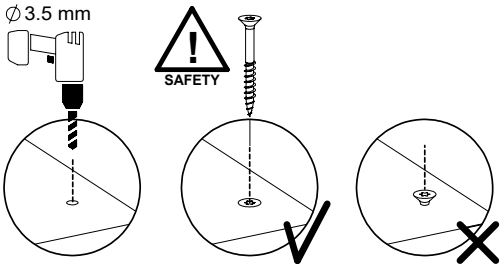

Assembly Pack: 194_101

	PartNo	PartName	QTY.
Hardware + Parts	002_220	Gap Point Screw T25 - 5x45	16
	002_223	Gap Point Screw T25 - 5x80	4
Timber	C74	Beam 740 mm	1
	D65	Board 650 mm	4

Balustrade 80 - P02 U - 27/05/2025 - v4.2

Manual ID: 040_075_2613

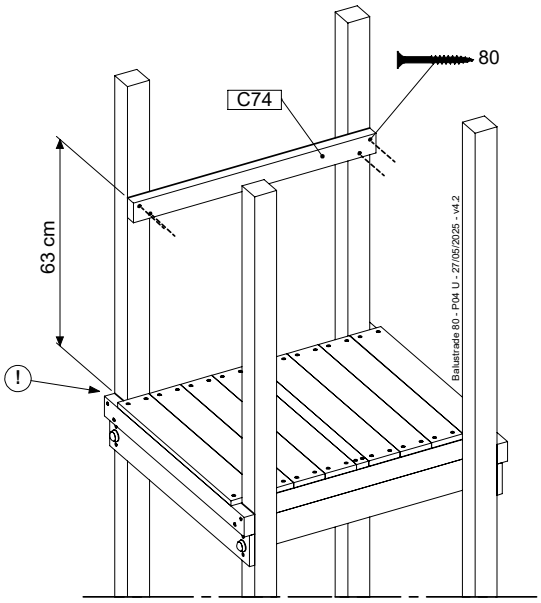

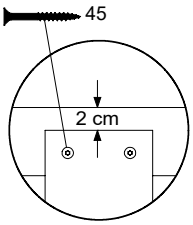

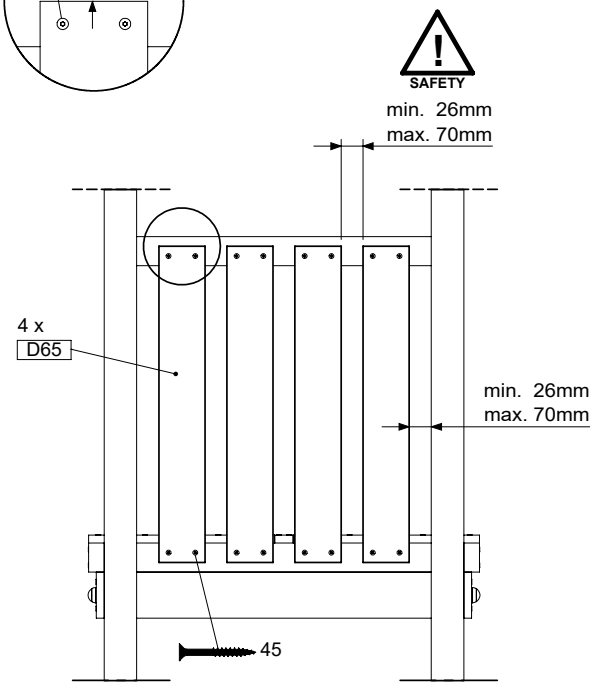

Design code: ZzsFCu, © 2025 Jungle Gym B.V. All rights reserved. Single-owner licensed. No part of this document may be reproduced or utilized otherwise in any form or by any means, electronic or mechanical, including photocopying or posting on the internet or an intranet—copying and networking prohibited.

4 BL02a: Balustrade 80 T

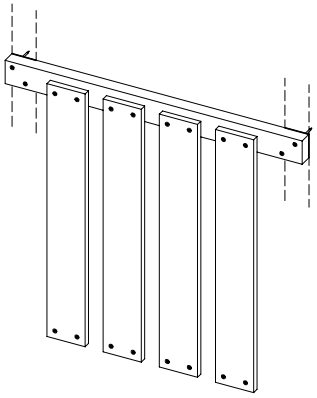

Assembly Pack: 194_101

	PartNo	PartName	QTY.
Hardware + Parts	002_220	Gap Point Screw T25 - 5x45	16
	002_223	Gap Point Screw T25 - 5x80	4
Timber	C74	Beam 740 mm	1
	D65	Board 650 mm	4

Balustrade 80 - P03 T - 27/05/2025 - v4.2

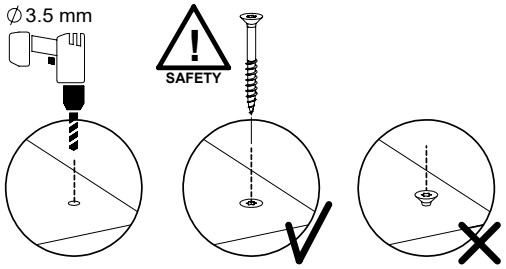

Manual ID: 040_075_2613

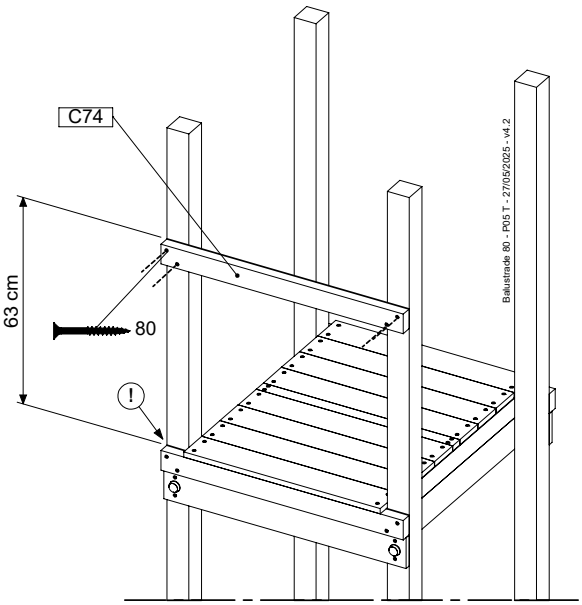

Balustrade 80 - P05 T - 27/05/2025 - v4.2

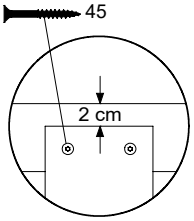

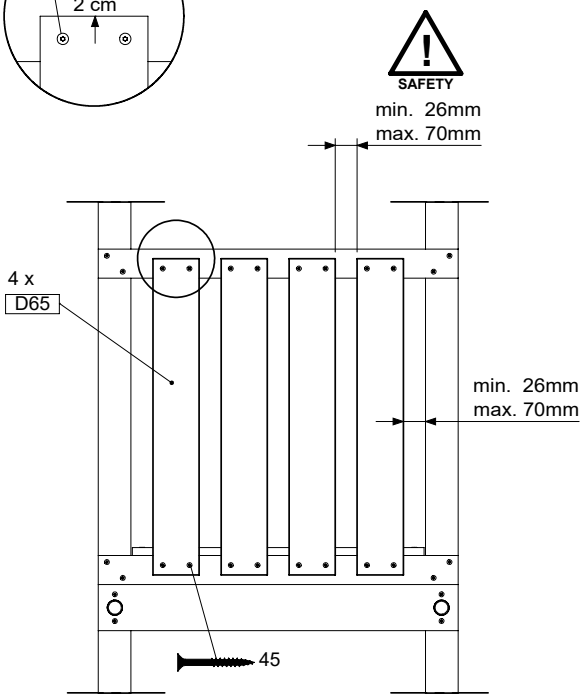

Design code: ZzsFCu, © 2025 Jungle Gym B.V. All rights reserved. Single-owner licensed. No part of this document may be reproduced or utilized otherwise in any form or by any means, electronic or mechanical, including photocopying or posting on the internet or an intranet—copying and networking prohibited.

5 RF03a: Roof Canvas Tipi 80

Assembly Pack: 194_108 / 194_805

	PartNo	PartName	QTY.
Hardware + Parts	001_417	Stealth Screw 8x80	6
	002_219	Gap Point Screw T25 - 5x30	12
	002_220	Gap Point Screw T25 - 5x45	8
	002_223	Gap Point Screw T25 - 5x80	2
	002_308	Gap Point Screw T25 - 5x20	10
	022_31x	bpc-base version 3	6
	022_84x	bpc cover	6
	023_031	Finishing Washer GPS 5.0	10
	123_220	Canvas sheet 735x1365mm	1
Timber	C74	Beam 740 mm	1
	D56	Board L=(650 - board width) mm	2
	D74	Board 740 mm	6

Roof Canvas - P03 - 21/05/2024 - v4.1

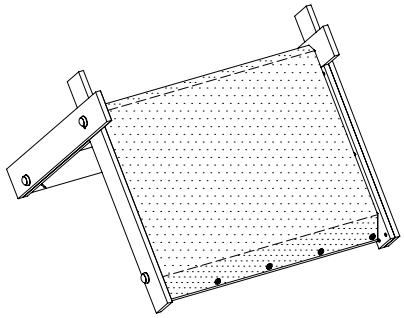

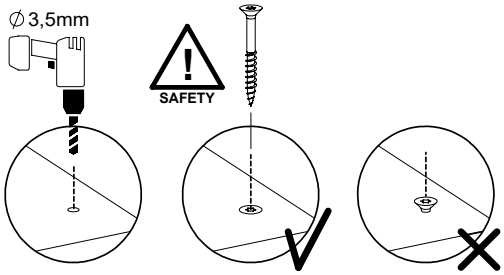

Manual ID: 040_075_2613

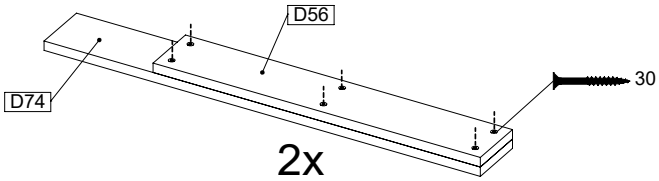

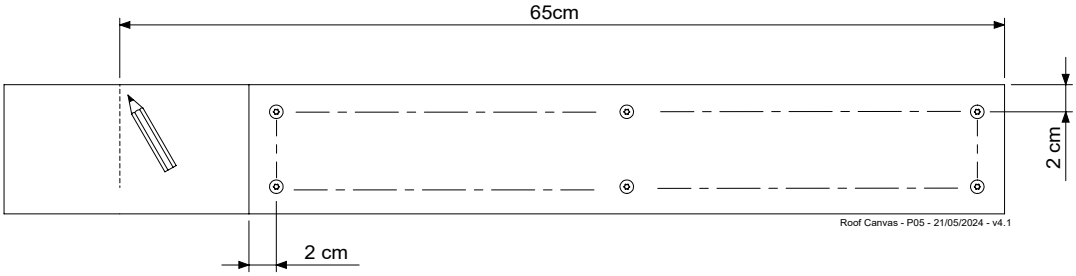

Roof Canvas - P05 - 21/05/2024 - v4.1

Design code: ZzsFCu, © 2025 Jungle Gym B.V. All rights reserved. Single-owner licensed. No part of this document may be reproduced or utilized otherwise in any form or by any means, electronic or mechanical, including photocopying or posting on the internet or an intranet—copying and networking prohibited.

5.1

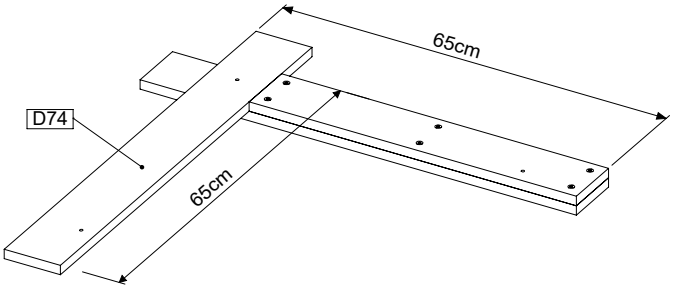

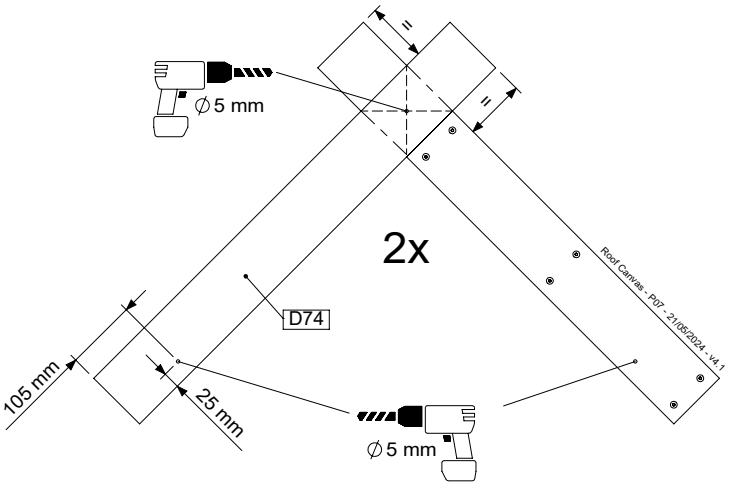

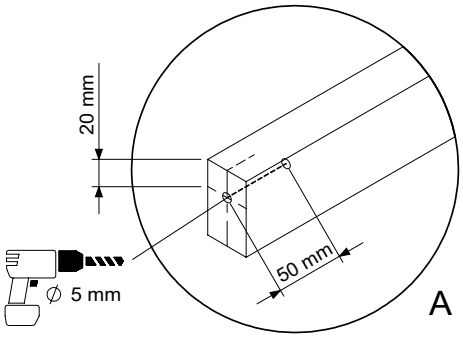

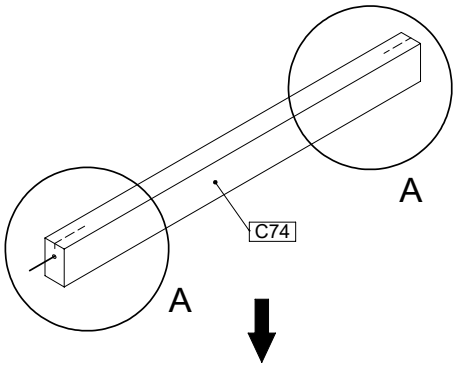

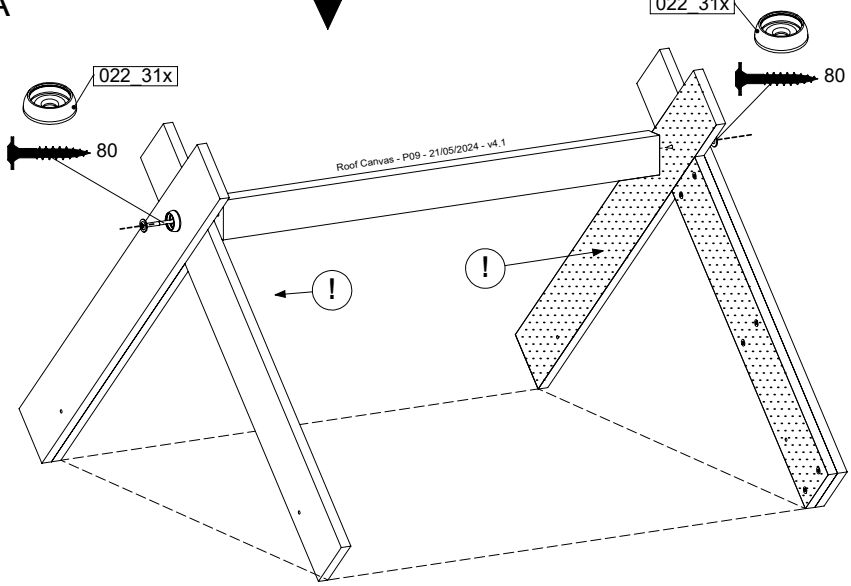

Manual ID: 040_075_2613

Design code: ZzsFCu, © 2025 Jungle Gym B.V. All rights reserved. Single-owner licensed. No part of this document may be reproduced or utilized otherwise in any form or by any means, electronic or mechanical, including photocopying or posting on the internet or an intranet—copying and networking prohibited.

5.2

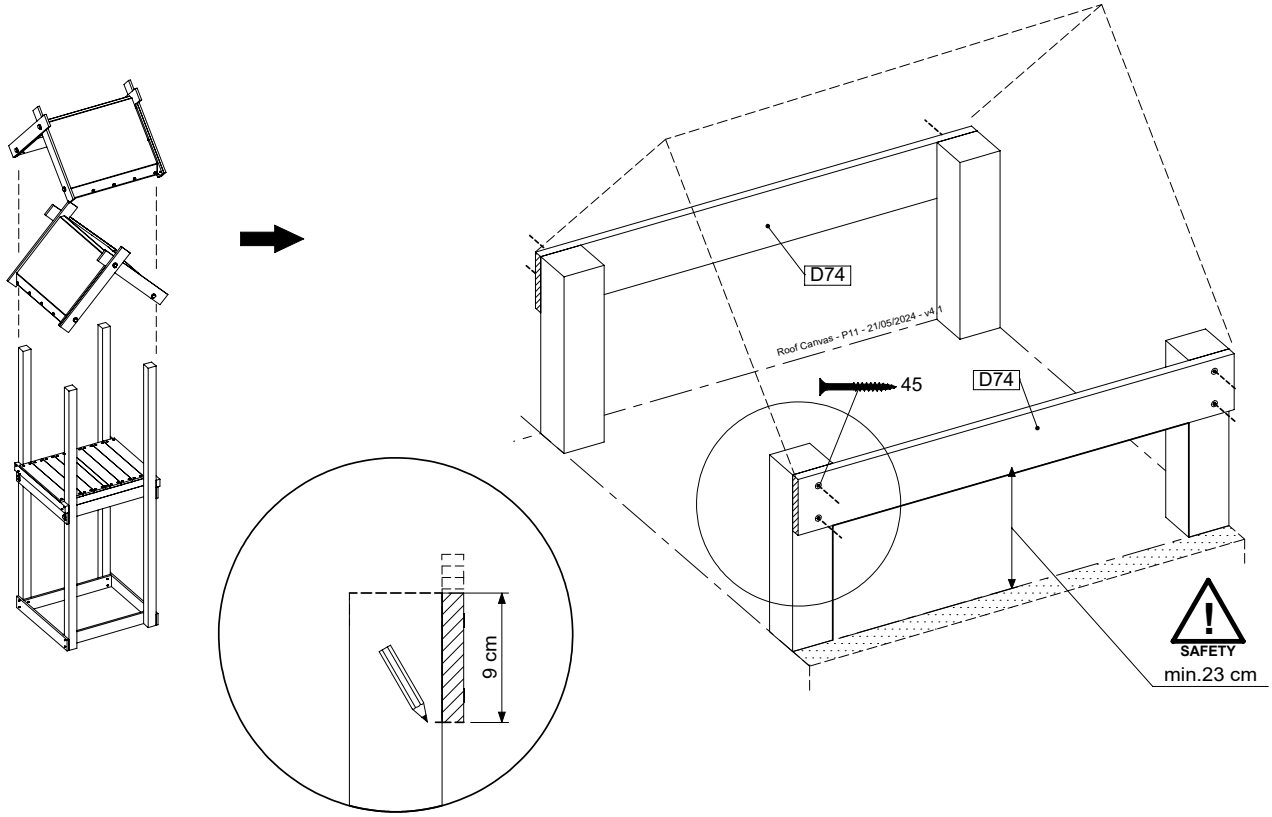

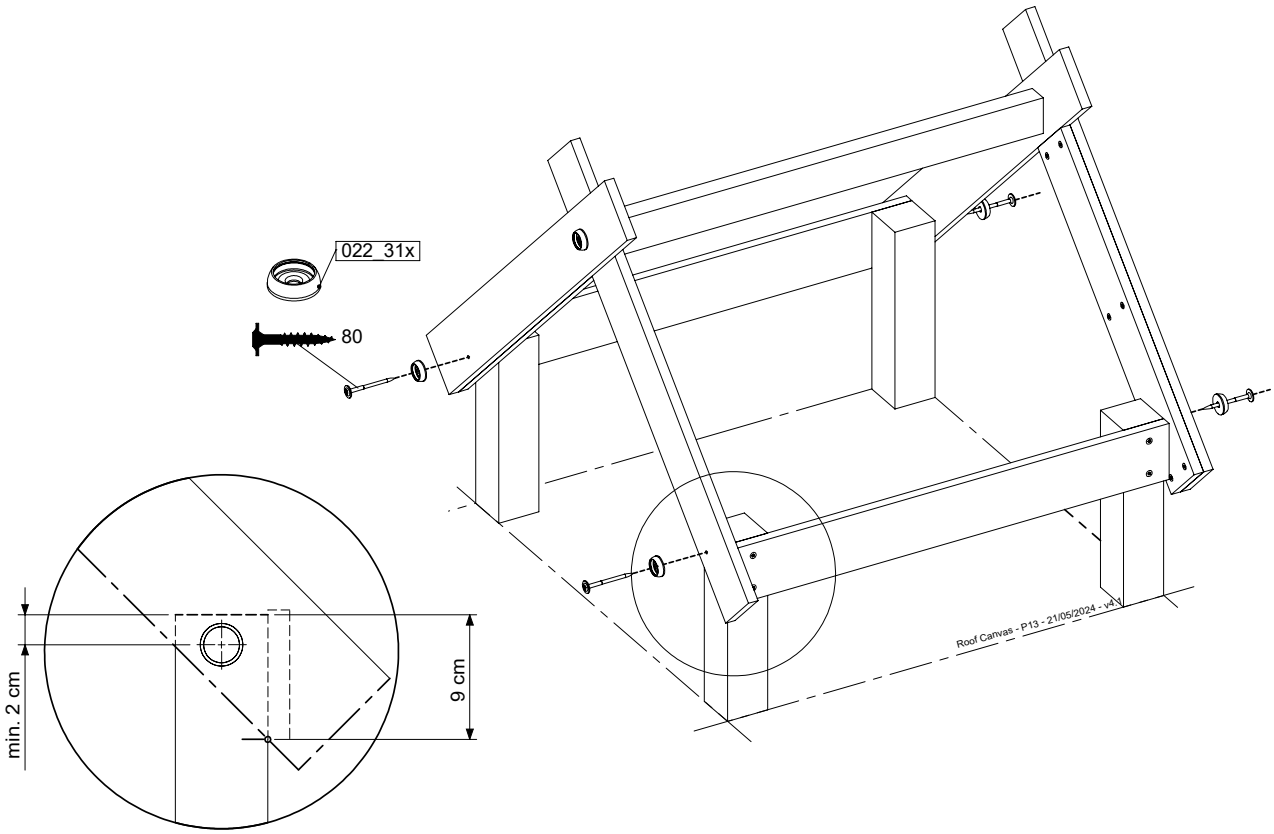

Manual ID: 040_075_2613

Design code: ZzsFCu, © 2025 Jungle Gym B.V. All rights reserved. Single-owner licensed. No part of this document may be reproduced or utilized otherwise in any form or by any means, electronic or mechanical, including photocopying or posting on the internet or an intranet—copying and networking prohibited.

5.3

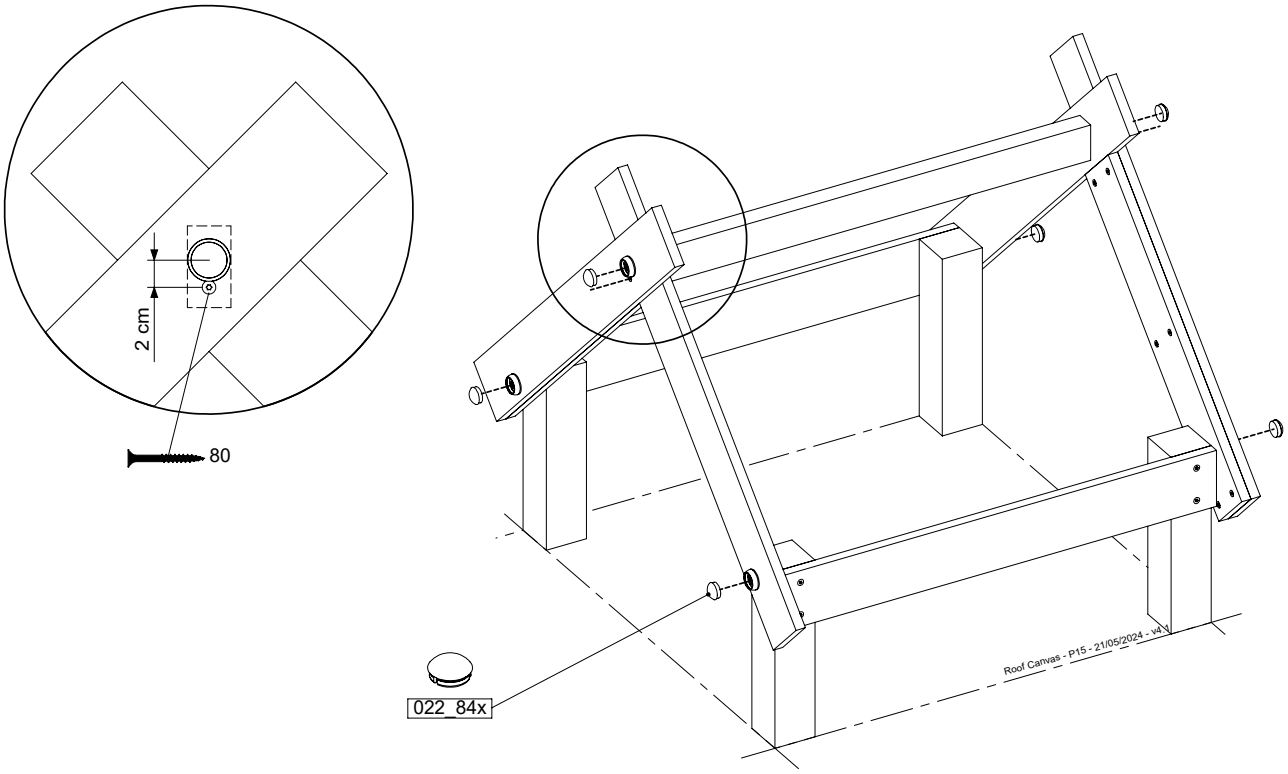

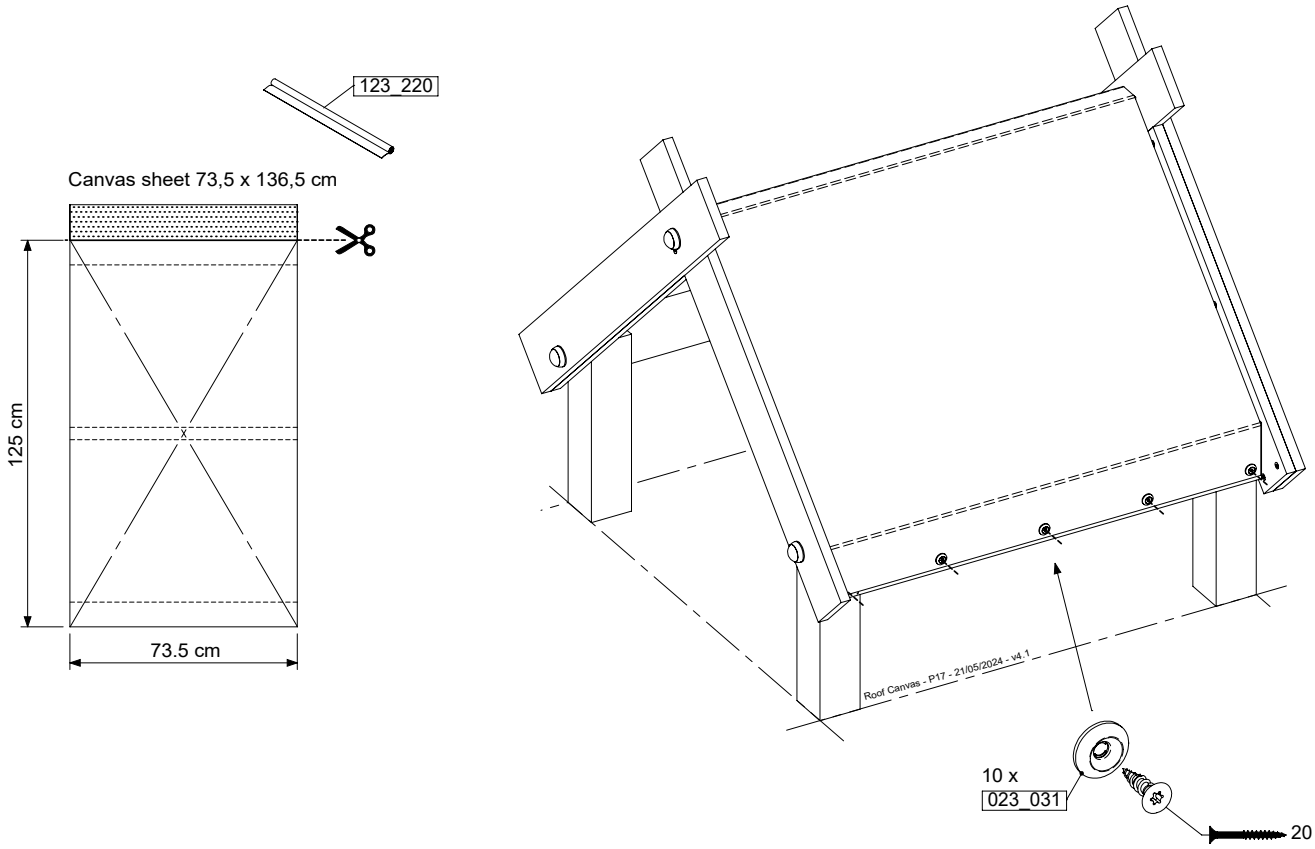

Manual ID: 040_075_2613

Design code: ZzsFCu, © 2025 Jungle Gym B.V. All rights reserved. Single-owner licensed. No part of this document may be reproduced or utilized otherwise in any form or by any means, electronic or mechanical, including photocopying or posting on the internet or an intranet—copying and networking prohibited.

6 TS02a: Two Step 80 125 T

(194_102 / 194_002)

	PartNo	PartName	QTY.
Hardware Pack 100_602 /100_902	001_406	Stealth Screw 8x45	8
	002_220	Gap Point Screw T25 - 5x45	4
	002_223	Gap Point Screw T25 - 5x80	5
Other	022_53x	Ladder/ Rope Rung 30cm	4
	022_84x	bpc cover	8
	120_102	Handgrip set (2x Complete)	1
Timber	A123	Post 70x70 L1230	1
	C74	Beam 740 mm	1

TwoStep-Ladder - P02 - 08/09/2022 - v4

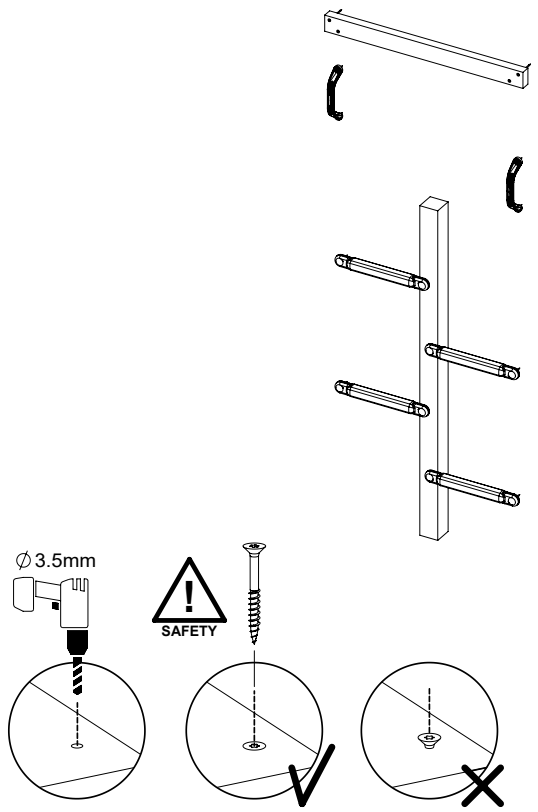

Manual ID: 040_075_2613

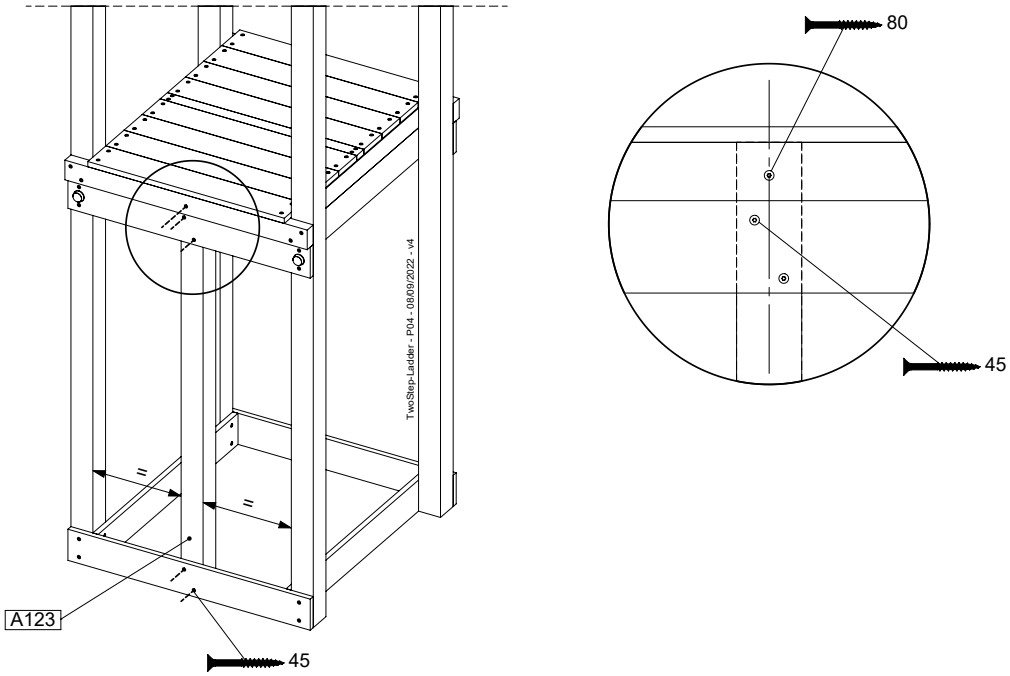

Design code: ZzsFCu, © 2025 Jungle Gym B.V. All rights reserved. Single-owner licensed. No part of this document may be reproduced or utilized otherwise in any form or by any means, electronic or mechanical, including photocopying or posting on the internet or an intranet—copying and networking prohibited.

6.1

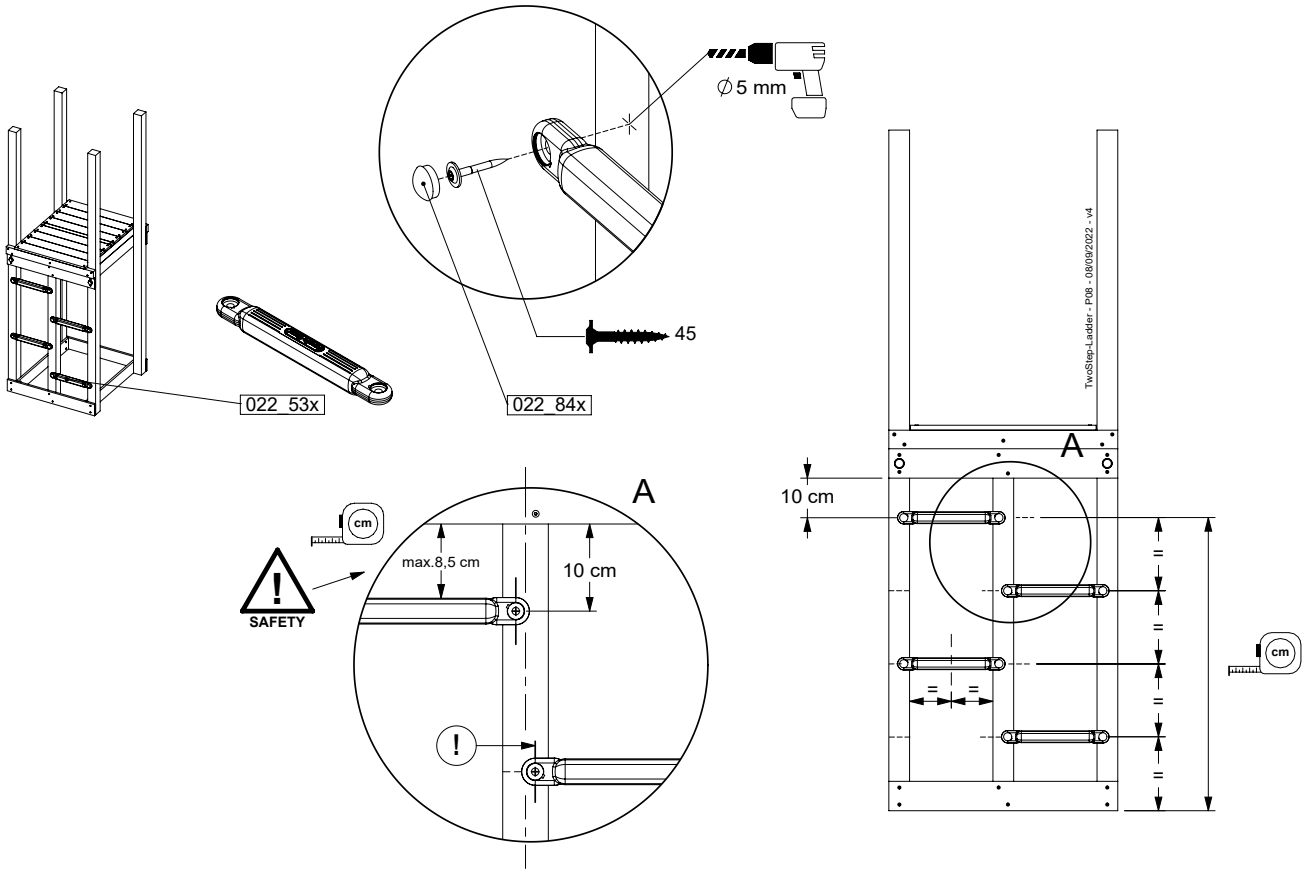

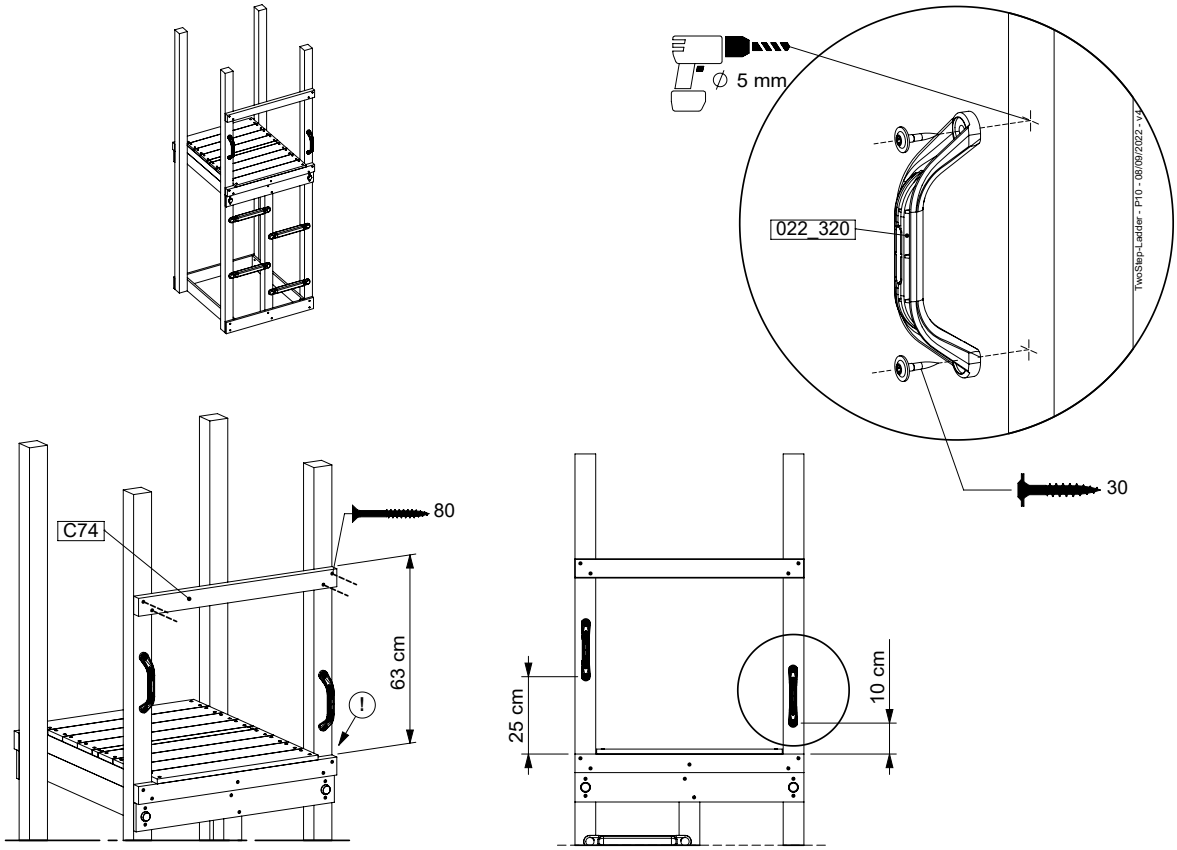

Manual ID: 040_075_2613

Design code: ZzsFCu, © 2025 Jungle Gym B.V. All rights reserved. Single-owner licensed. No part of this document may be reproduced or utilized otherwise in any form or by any means, electronic or mechanical, including photocopying or posting on the internet or an intranet—copying and networking prohibited.

7 RW01a: Rock wall 80 125 U

(194_105)

	PartNo	PartName	QTY.
Hardware pack 100_604	001_102	Washer Head Screw T40 M8x30	8
	002_220	Gap Point Screw T25 - 5x45	24
	002_223	Gap Point Screw T25 - 5x80	4
	003_010	M8 spring lock washer	8
	004_050	M8 22mm Drive in Nut	8
Other	022_50x	Climbing Rock	4
	120_102	Handgrip set (2x Complete)	1
Timber	C74	Beam 740 mm	1
	D74	Board 740 mm	5

Rockwall 80 - P02 - 29-9-2021 - v4

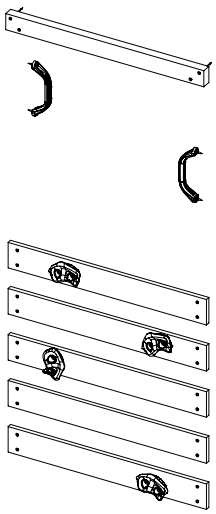

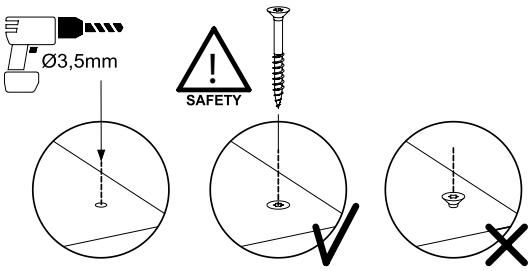

Manual ID: 040_075_2613

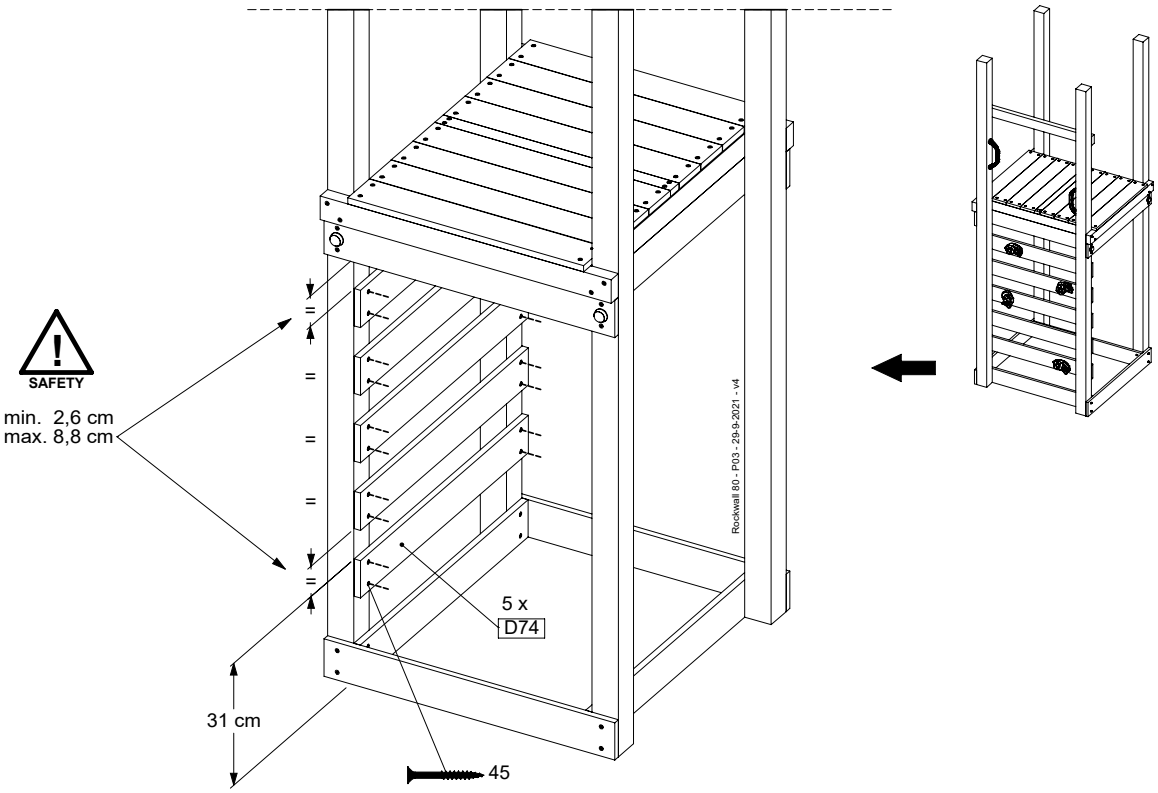

Design code: ZzsFCu, © 2025 Jungle Gym B.V. All rights reserved. Single-owner licensed. No part of this document may be reproduced or utilized otherwise in any form or by any means, electronic or mechanical, including photocopying or posting on the internet or an intranet—copying and networking prohibited.

7.1

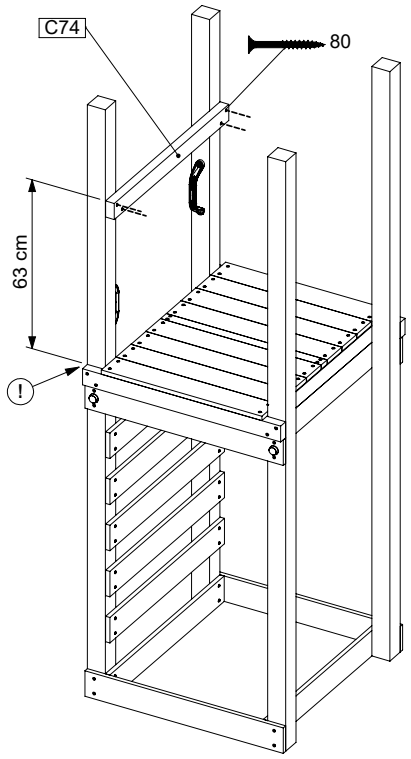

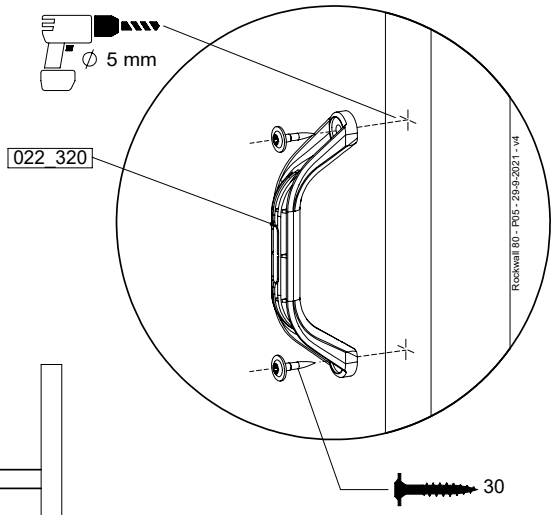

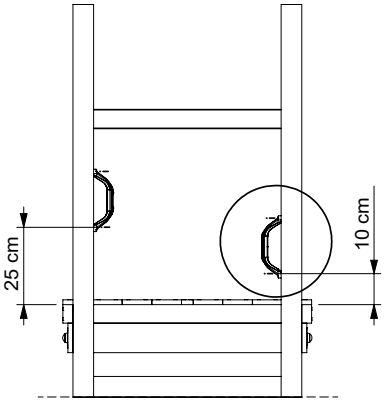

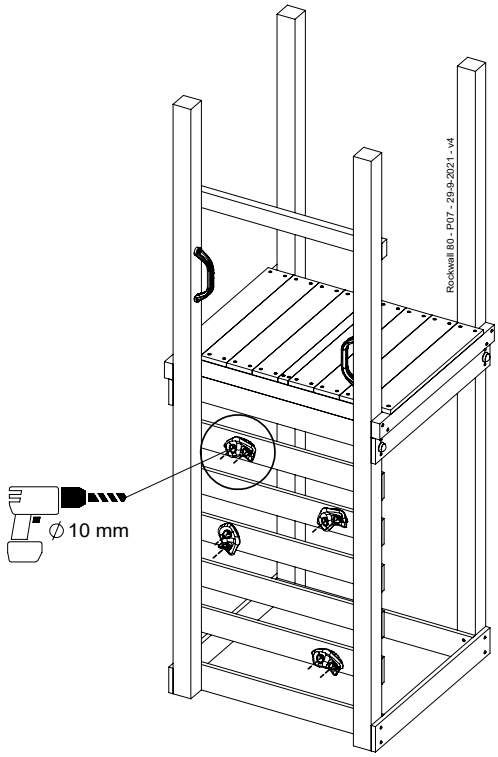

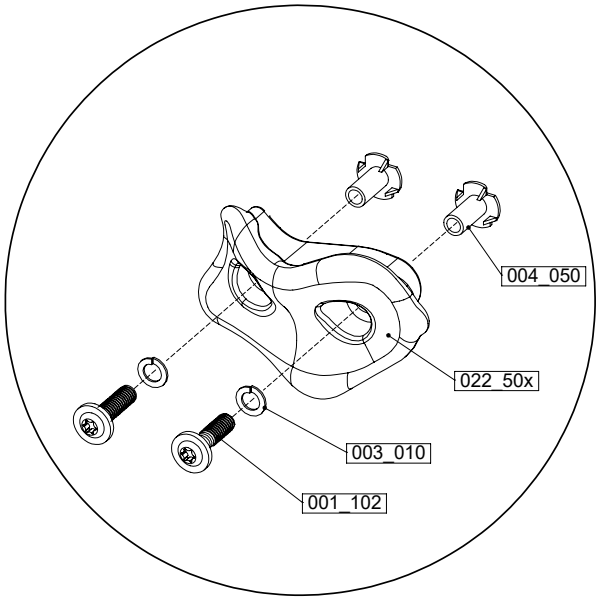

Manual ID: 040_075_2613

Design code: ZzsFCu, © 2025 Jungle Gym B.V. All rights reserved. Single-owner licensed. No part of this document may be reproduced or utilized otherwise in any form or by any means, electronic or mechanical, including photocopying or posting on the internet or an intranet—copying and networking prohibited.

8 SL01a: Slide 80 125 U

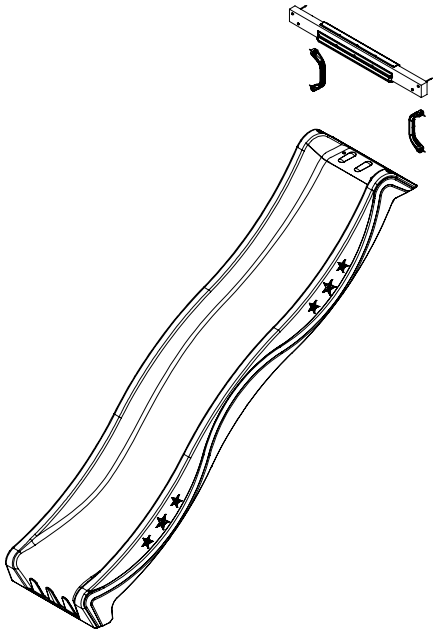

Assembly Pack: 194_107

	PartNo	PartName	QTY.
Hardware Pack 100_605	000_101	Nail Pan Head	10
	002_223	Gap Point Screw T25 - 5x80	4
	002_308	Gap Point Screw T25 - 5x20	2
Other	120_102	Handgrip set (2x Complete)	1
	123_200	Bumperpad	1
	324_xxx 334_xxx	Wavy Star Slide XL 2200 mm / Wavy Star Slide XL 2650 mm	1
Timber	C74	Beam 740 mm	1

Slide set - P02 - 08/04/2024 - v4.2

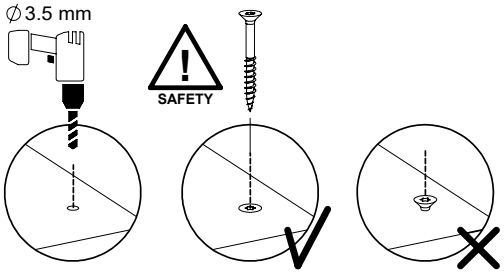

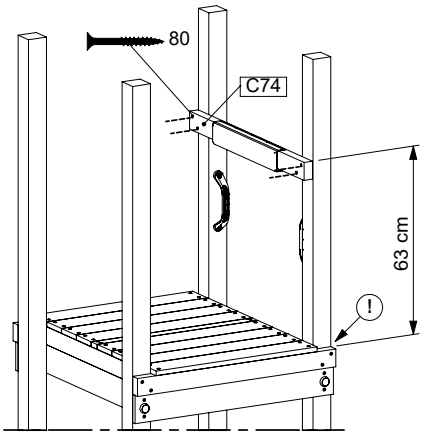

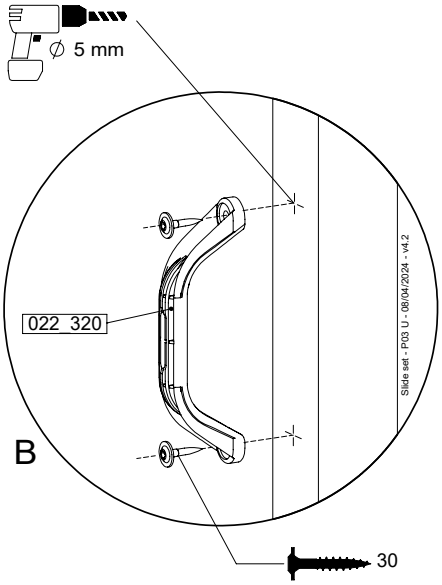

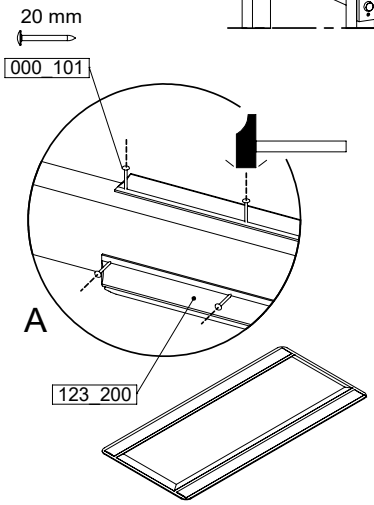

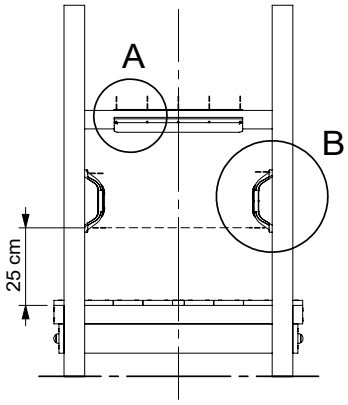

Manual ID: 040_075_2613

Design code: ZzsFCu, © 2025 Jungle Gym B.V. All rights reserved. Single-owner licensed. No part of this document may be reproduced or utilized otherwise in any form or by any means, electronic or mechanical, including photocopying or posting on the internet or an intranet—copying and networking prohibited.

8.1

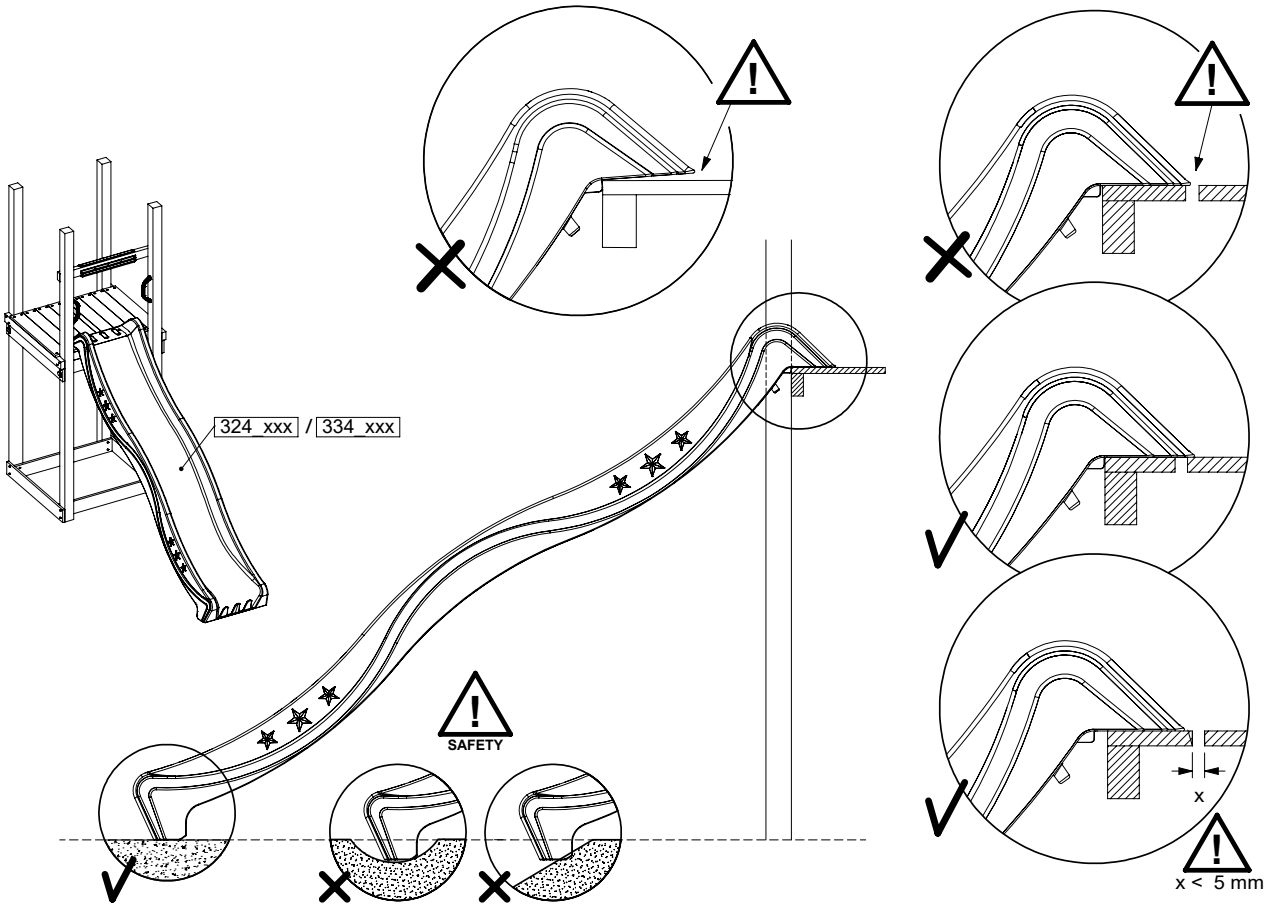

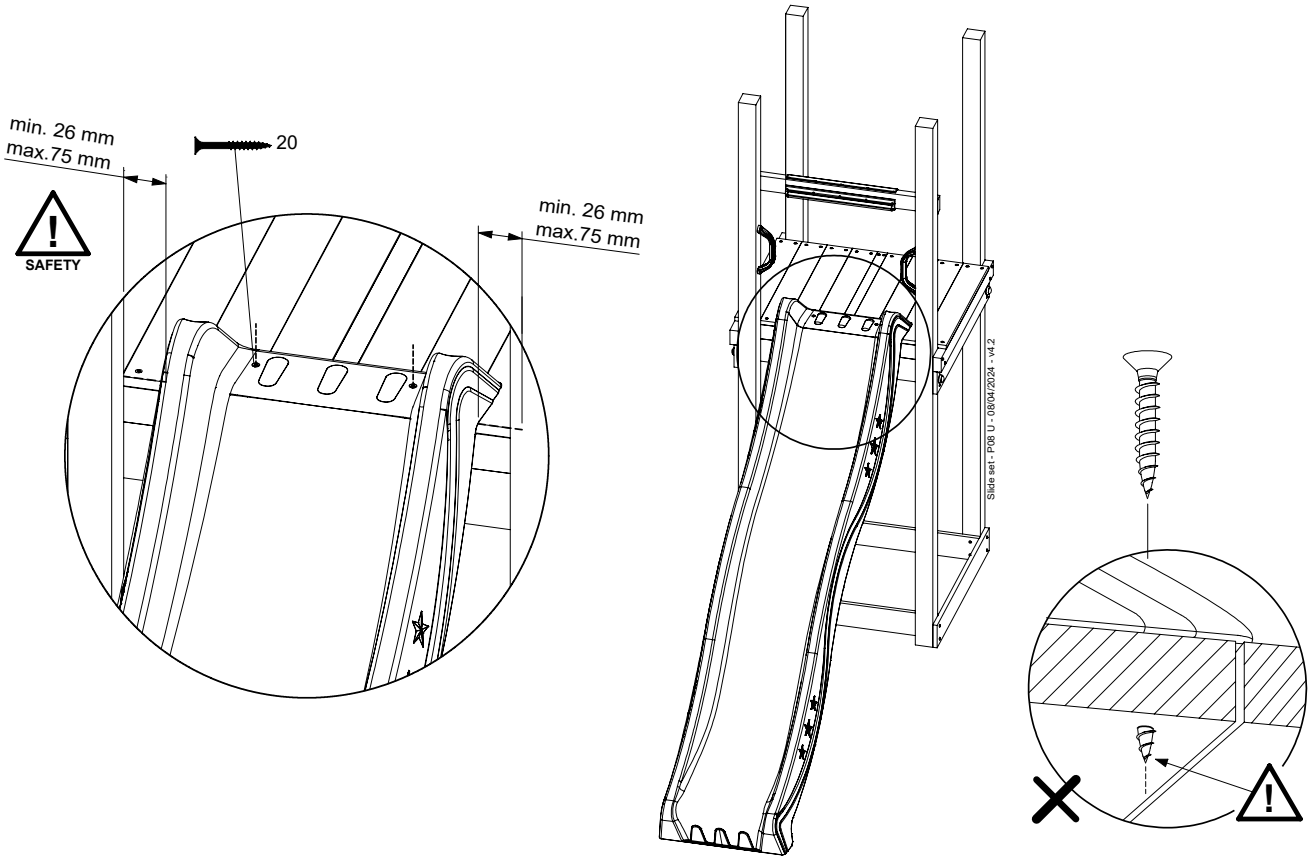

Manual ID: 040_075_2613

Design code: ZzsFCu, © 2025 Jungle Gym B.V. All rights reserved. Single-owner licensed. No part of this document may be reproduced or utilized otherwise in any form or by any means, electronic or mechanical, including photocopying or posting on the internet or an intranet—copying and networking prohibited.

8.2

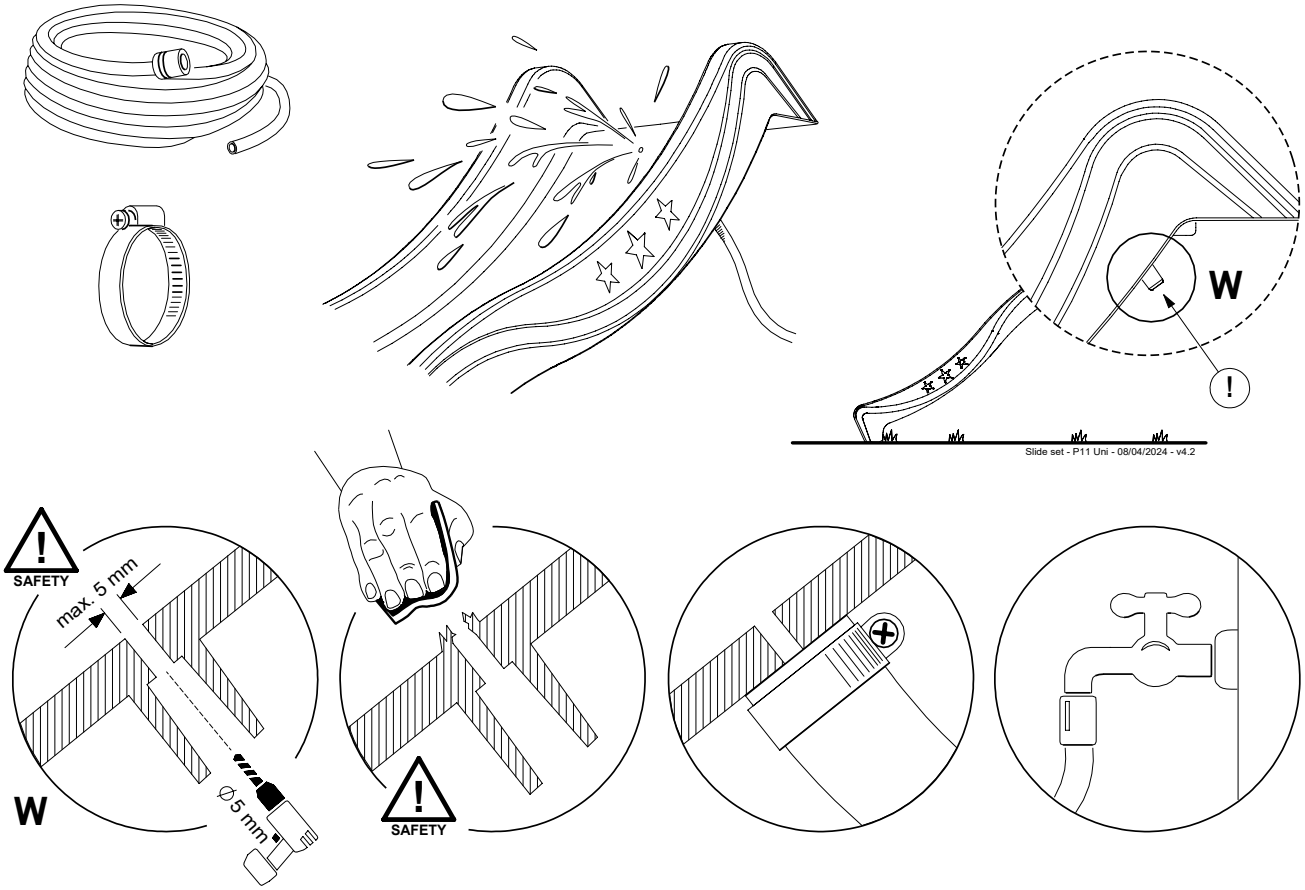

Manual ID: 040_075_2613

Design code: ZzsFCu, © 2025 Jungle Gym B.V. All rights reserved. Single-owner licensed. No part of this document may be reproduced or utilized otherwise in any form or by any means, electronic or mechanical, including photocopying or posting on the internet or an intranet—copying and networking prohibited.

9 GA: Ground Anchors

BASE TOWERS

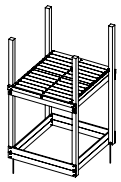

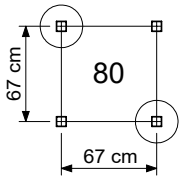

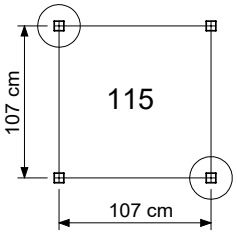

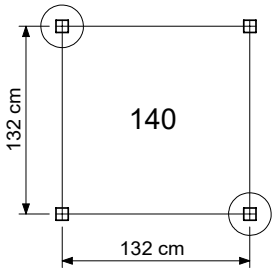

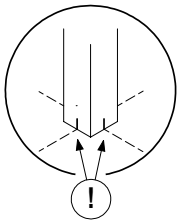

EXTENSION TOWERS

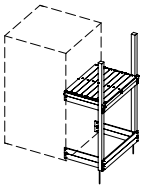

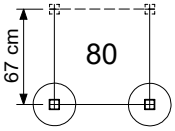

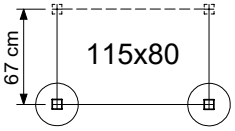

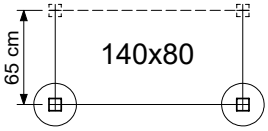

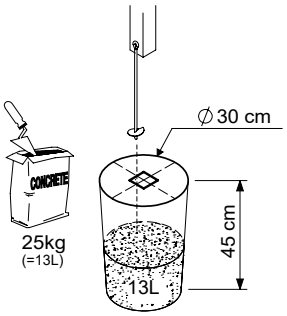

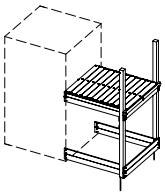

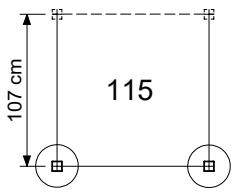

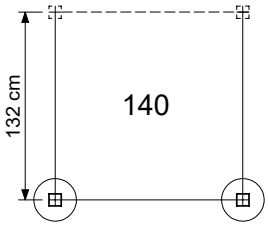

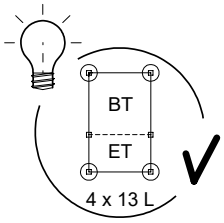

Ground Anchors Uni. - P03 - 08/04/2025 - v2.2

BRIDGES

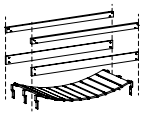

CLATTER

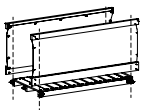

BOARDWALK

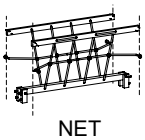

NET

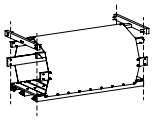

TUNNEL

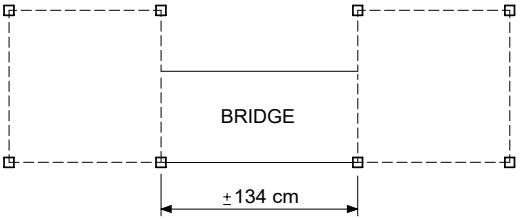

Ground Anchors Uni. - P04 - 08/04/2025 - v2.2

SWING / CLIMB

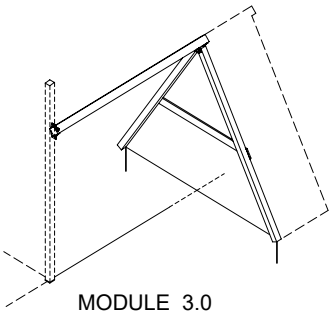

MODULE 3.0

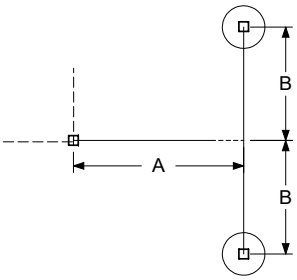

	Module type	A	B
MODULE 3.0	1-Swing 200 - 3.0	155	110
	1-Swing 220 (Extra) - 3.0		115
	1-Climb 200 - 3.0	148	110
	2-Climb 200 - 3.0	222	
	2-Swing 200 - 3.0	215	
	1-Climb 220 (Extra) - 3.0	170	115
	2-Climb 220 (Extra) - 3.0	242	
	2-Swing 220 (Extra) - 3.0	235	

cm

Post ground anchor
- optional -

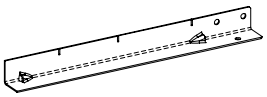

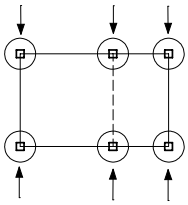

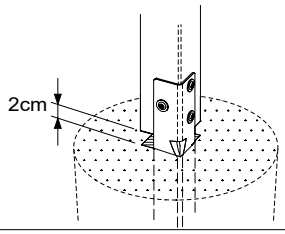

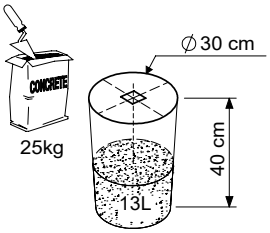

Manual ID: 040_075_2613

Design code: ZzsFCu, © 2025 Jungle Gym B.V. All rights reserved. Single-owner licensed. No part of this document may be reproduced or utilized otherwise in any form or by any means, electronic or mechanical, including photocopying or posting on the internet or an intranet—copying and networking prohibited.

9.1

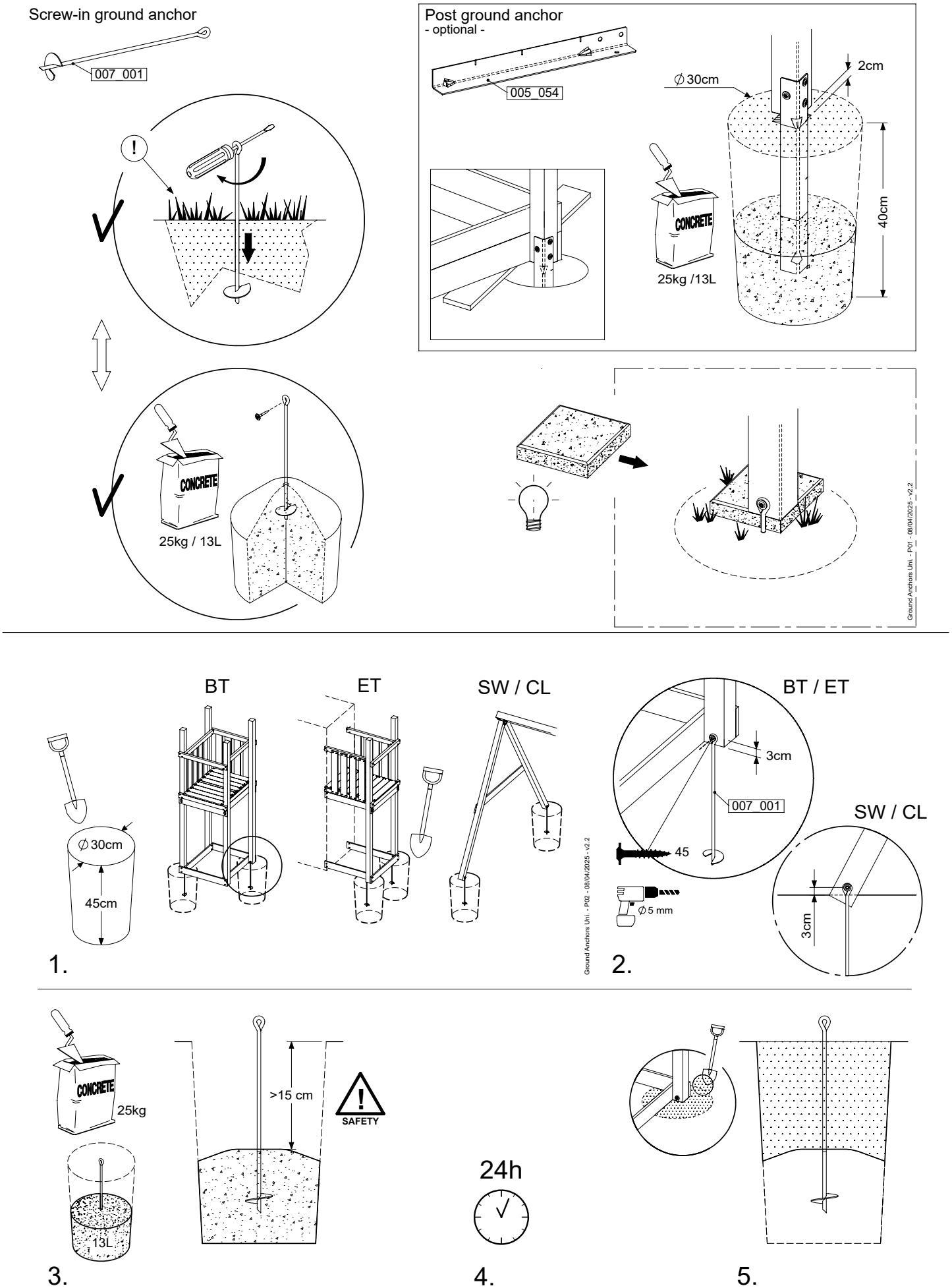

Manual ID: 040_075_2613

Design code: ZzsFCu, © 2025 Jungle Gym B.V. All rights reserved. Single-owner licensed. No part of this document may be reproduced or utilized otherwise in any form or by any means, electronic or mechanical, including photocopying or posting on the internet or an intranet—copying and networking prohibited.

10 AC01a: Accessories

(194_119)

	PartNo	PartName	QTY.
Hardware Pack 100_617	001_406	Stealth Screw 8x45	1
	002_041	Dome head screw 4.5 x 20 mm	3
	002_042	Dome head screw 3.5 x 13mm	4
	002_219	Gap Point Screw T25 - 5x30	2
Other	022_300	Steering Wheel	1
	022_800	Rail P/T 105	1
	022_910	Sandpad	1
	103_901	Logo ID Plate	1
	104_107	Tool Set Climbing Units	1
	120_024	Tower Flag	1
	122_302	Telescope	1

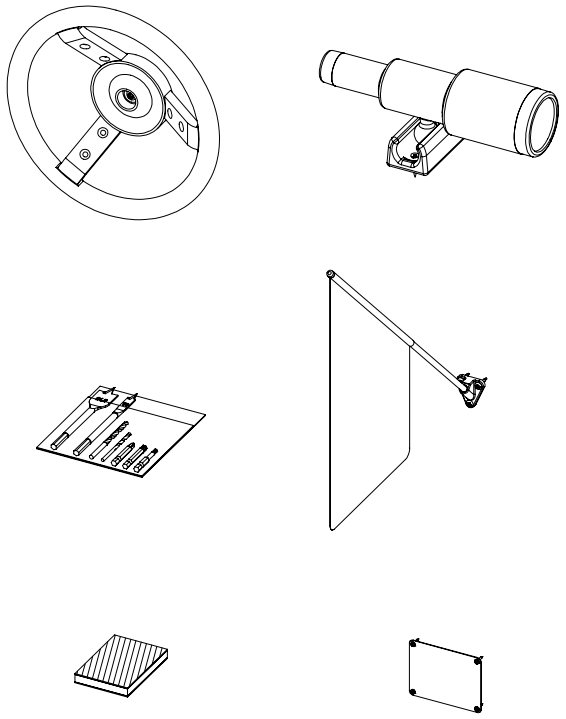

Accessory set - P02 - 24/01/2024 - v5

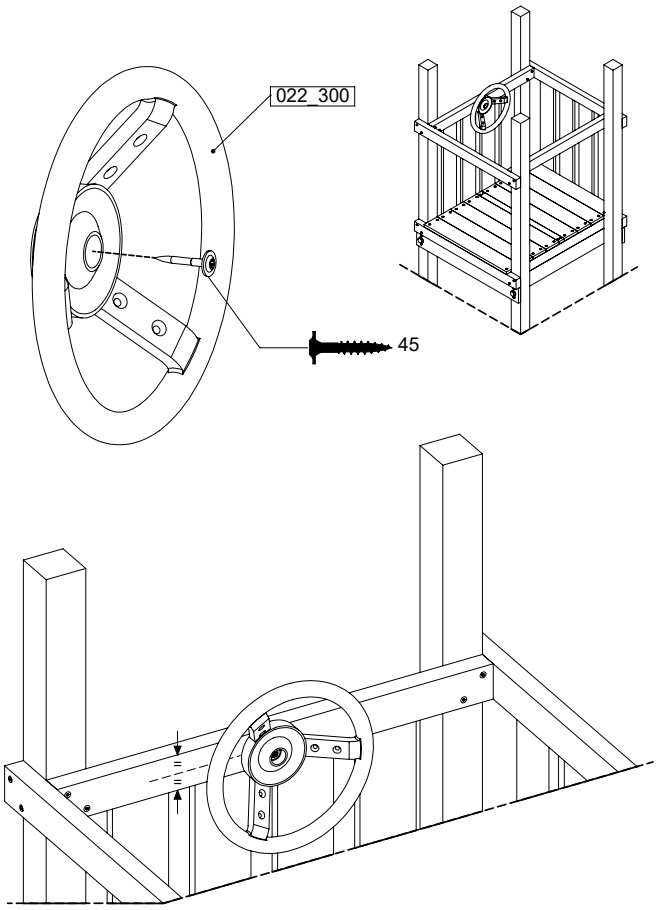

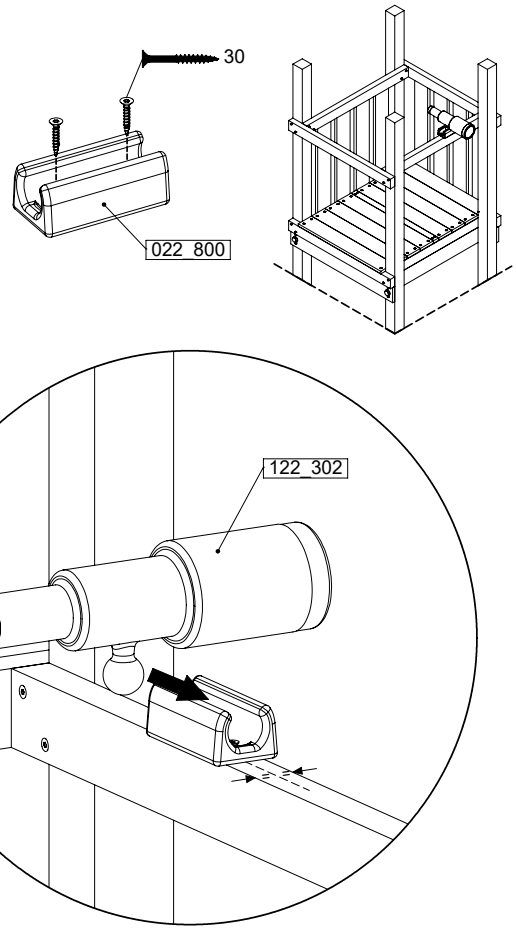

Accessory set - P03 - 24/01/2024 - v5

Manual ID: 040_075_2613

Design code: ZzsFCu, © 2025 Jungle Gym B.V. All rights reserved. Single-owner licensed. No part of this document may be reproduced or utilized otherwise in any form or by any means, electronic or mechanical, including photocopying or posting on the internet or an intranet—copying and networking prohibited.

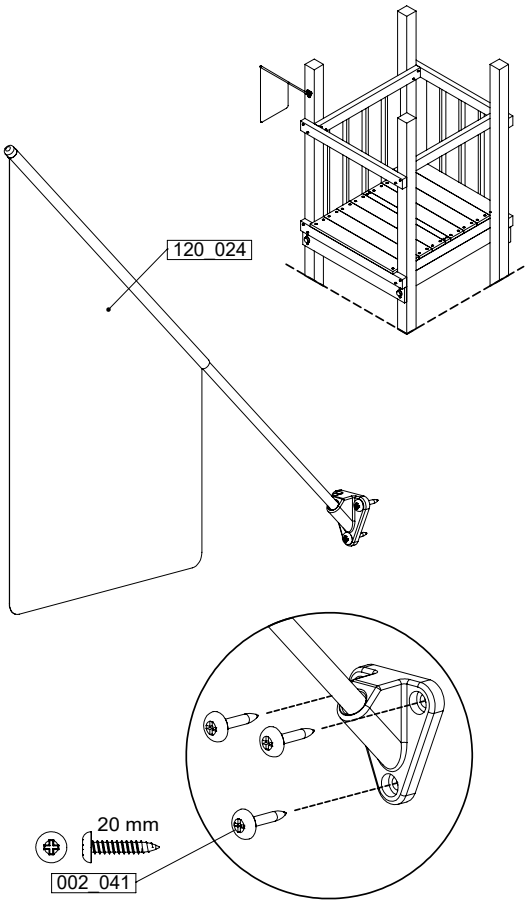

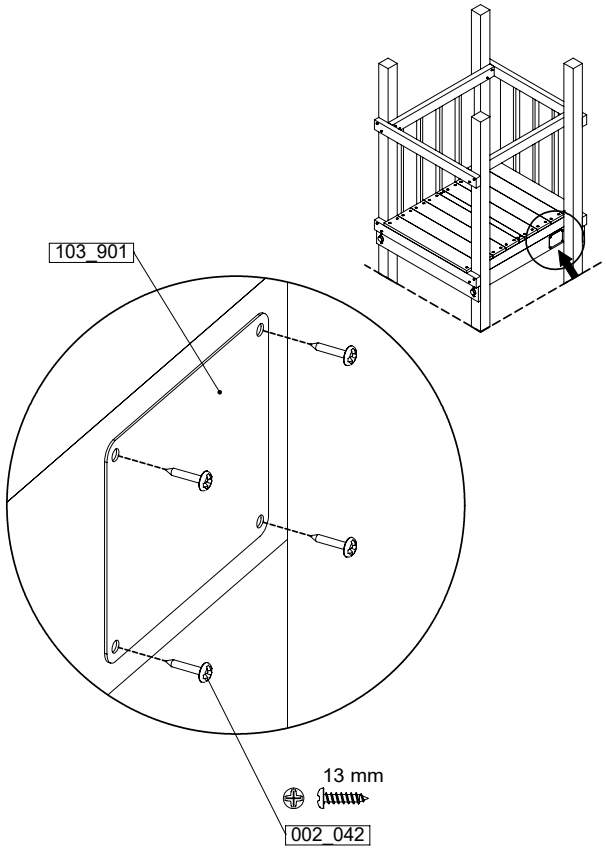

Accessory set - P04 - 24/01/2024 - v5

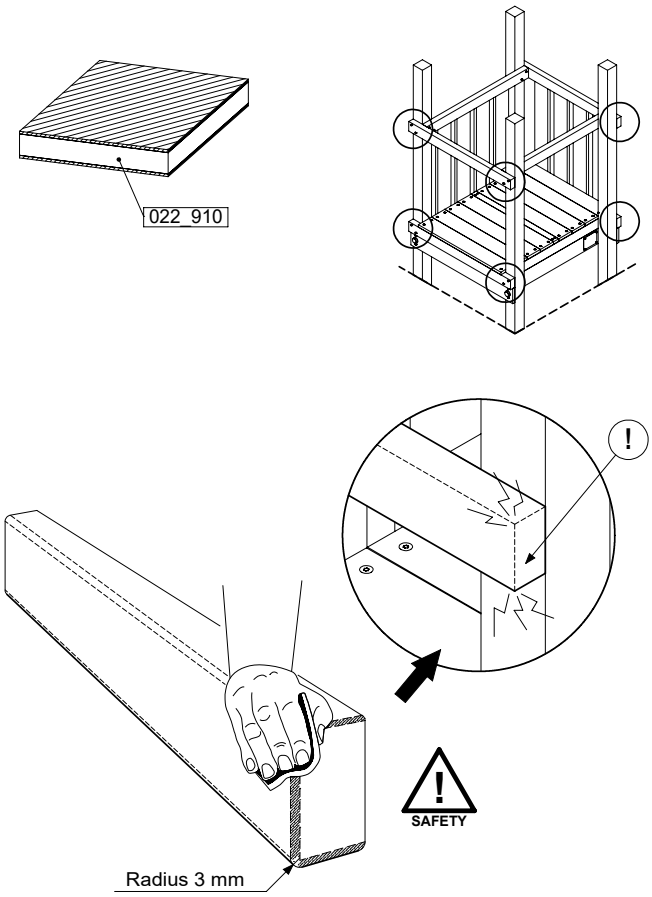

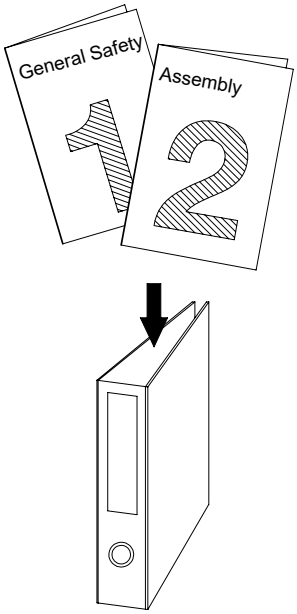

Accessory set - P05 - 24/01/2024 - v5

Manual ID: 040_075_2613

Design code: ZzsFCu, © 2025 Jungle Gym B.V. All rights reserved. Single-owner licensed. No part of this document may be reproduced or utilized otherwise in any form or by any means, electronic or mechanical, including photocopying or posting on the internet or an intranet—copying and networking prohibited.

Safe play instructions and safety notices
Sichere Spielanweisungen und Sicherheitswarnungen
Consignes de jeu sécurisé et avis de sécurité

1
Part 1

2
Part 1

4
Part 1

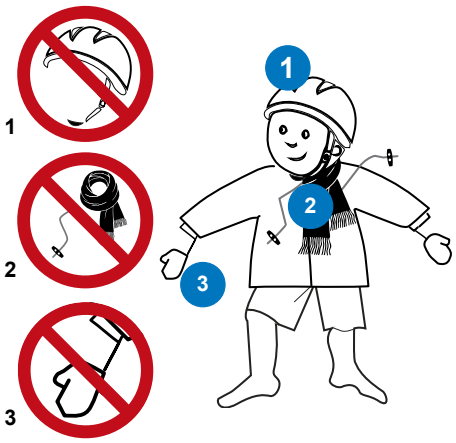

3
Part 1

Maximum number of users
Maximale Benutzerzahl
Le nombre maximal d'utilisateurs

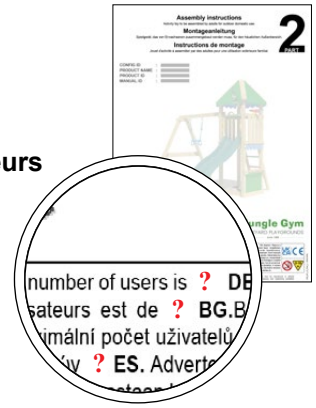

Manual ID: 040_075_2613

4
Part 1

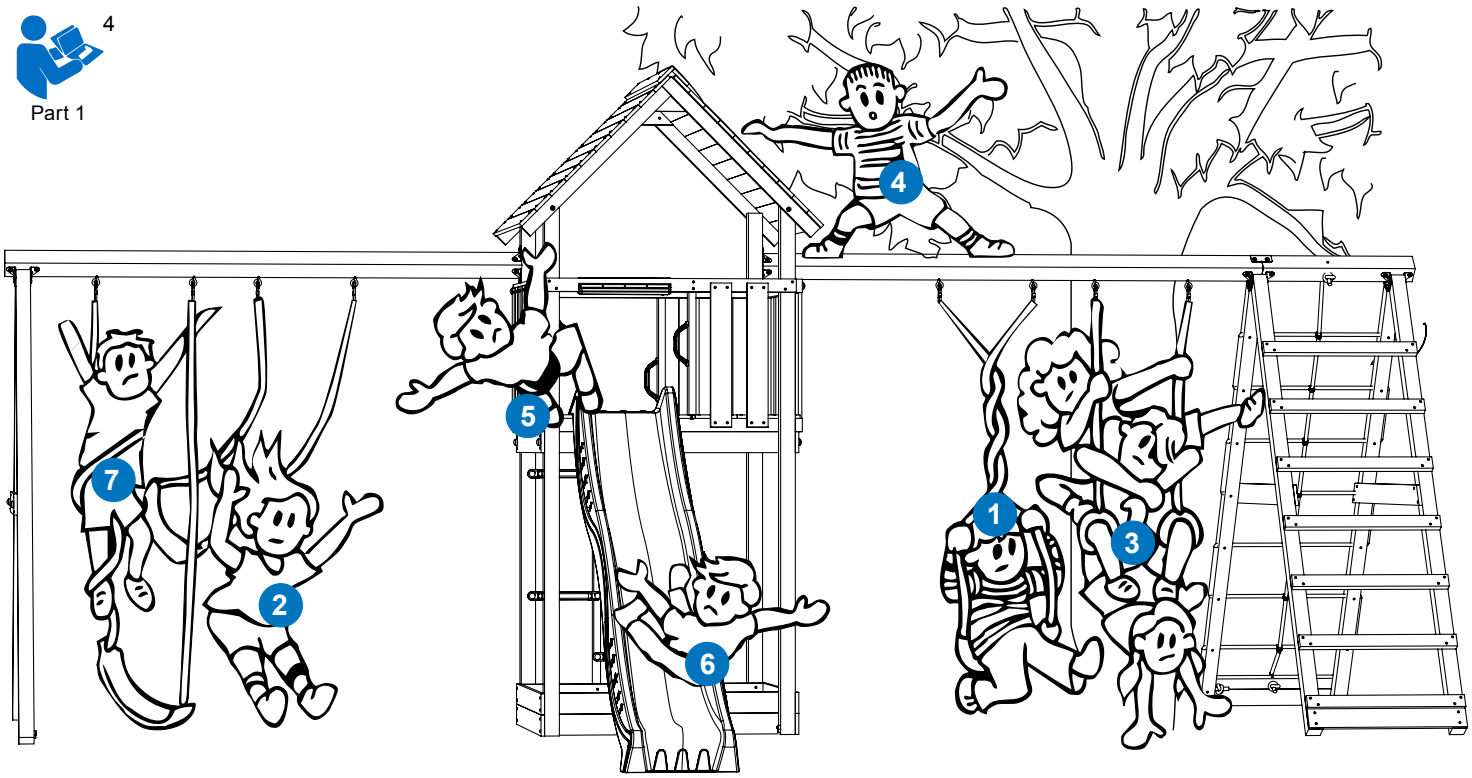

Design code: ZzsFCu, © 2025 Jungle Gym B.V. All rights reserved. Single-owner licensed. No part of this document may be reproduced or utilized otherwise in any form or by any means, electronic or mechanical, including photocopying or posting on the internet or an intranet—copying and networking prohibited.

EU Declaration of Conformity
UK Conformity Assessed
EU-Konformitätserklärung
Déclaration EU de conformité

(in accordance with 768/2008/EC)

Product range: **Activity toys for domestic use**
Produktfamilie: **Aktivitätsspielzeug für den häuslichen Gebrauch**
Gamme de produits: **Jouets d'activité à usage familial**

DoC reference: 20250411_0500

Climbing frames

a. Assemblies for complete climbing frames - Bausätze für komplette Klettergerüste - Assemblages pour structures d'escalade complètes

Playtowers	801_005, 801_009, 801_010, 801_013, 801_025, 801_040, 801_060, 801_070, 801_090, 801_095, 801_100, 801_103, 801_105, 801_110, 801_120, 801_200, 802_202, 802_204, 802_206, 802_208, 803_202, 803_204, 803_206, 803_208, 803_210, 809_802, 809_804
Swings	801_300, 801_601, 801_602
Modules	850_176, 850_177, 850_231, 850_232, 857_101, 857_102, 857_105, 857_106, 857_151, 857_152, 857_157, 857_158, 850_240

b. Assemblies for climbing frames elements - Bausätze für Klettergerüst-Elemente - Assemblages pour éléments de structures d'escalade

Base towers (BT)	BT01a, BT02a, BT03a, BT11a, BT14a, BT15a, BT20a
Extension towers (ET)	ET01a, ET02a, ET05a, ET06a, ET07a, ET08a, ET09a, ET10a, ET11a, ET12a, ET13a, ET14a, ET15a, ET16a, ET17a, ET18a, ET19a, ET20a, ET22a, ET23a, ET27a, ET28a, ET35a, ET29a, ET39a, ET40a
Veranda (VD)	VD01a, VD02a, VD03a, VD04a, VD05a
Bridges (CB, NB, BB, TB)	CB01a, CB01b, NB01a, BB01a, BB02a, TB01a, TB02a, TB03a, TB04a
Roofs (RF)	RF01a, RF21a, RF02a, RF03a, RF04a, RF05a, RF06a, RF20a, RF02b, RF03b, RF28a, RF07a, RF08a, RF22a, RF09a, RF23a, RF11a, RF12a, RF16a, RF07b, RF12b, RF08b, RF22b, RF09b, RF23b, RF11b, RF29a, RF14a, RF24a, RF15a, RF25a, RF18a, RF17a, RF18b, RF14b, RF24b, RF15b, RF25b
Balustrade (BL, BF)	BL01a, BL02a, BL11a, BL12a, BL21a, BF25a, BF26a, BF27a, BF28a, BL03a, BL04a, BL13a, BL14a, BF01a, BF02a, BF03a, BF04a, BF05a, BF06a, BF07a, BF08a, BF01b, BF02b, BF03b, BF04b, BF05b, BF06b, BF07b, BF08b, BL05a, BL06a, BL07a, BL08a, BL09a, BL10a, BL15a, BL16a, BF21a, BF22a, BF23a, BF24a, BF21b, BF22b, BF23b, BF24b
Playhouse (PH)	PH03a, PH04a, PH05a, PH06a, PH10a, PH11a, PH40a, PH41a, PH12a, PH13a, PH14a, PH15a, PH42a, PH43a, PH44a, PH45a, PH16a, PH17a, PH18a, PH19a, PH30a, PH31a, PH16b, PH17b, PH18b, PH19b, PH46a, PH47a, PH48a, PH49a, PH16c, PH17c, PH18c, PH19c, PH46b, PH47b, PH48b, PH49b, PH20a, PH21a, PH22a, PH23a, PH24a, PH25a, PH26a, PH27a, PH32a, PH33a, PH52a, PH53a, PH54a, PH55a, PH56a, PH57a, PH50a, PH51a, PH26b, PH27b, PH26c, PH27c, PH56b, PH57b
Ladder (LA)	LA05a, LA06a, LA01a, LA02a, LA09a, LA03a, LA04a, LA01b, LA02b, LA09b, LA03b, LA04b, LA11a, LA12a, LA13a, LA14a, LA15a, LA16a, LA17a, LA18a, LA31a, LA32a, LA33a, LA34a, LA35a, LA36a, LA37a, LA38a, LA11b, LA12b, LA13b, LA14b, LA15b, LA16b, LA17b, LA18b, LA19a, LA20a, LA21a, LA22a, LA23a, LA24a, LA25a, LA26a, LA43a, LA44a, LA45a, LA46a, LA23b, LA24b, LA25b, LA26b
Two Step Ladder (TS)	TS01a, TS01b, TS02a, TS02b, TS03b, TS22a, TS05a, TS06a, TS07a, TS08a, TS09a, TS10a, TS11a, TS12a, TS15a, TS16a, TS17a, TS18a, TS19a, TS20a, TS21a, TS22a
Rope Ladder (RL)	RL01a, RL02a, RL05a, RL06a, RL07a, RL08a, RL09a, RL10a, RL11a, RL12a, RL15a, RL16a, RL19a, RL20a
Rock wall (RW)	RW01a, RW02a, RW01b, RW02b, RW03b, RW31a, RW32a, RW05a, RW06a, RW07a, RW08a, RW09a, RW10a, RW11a, RW12a, RW05b, RW06b, RW07b, RW08b, RW40a, RW41a, RW40b, RW41b, RW42a, RW43a, RW15a, RW16a, RW17a, RW18a, RW19a, RW20a, RW46a, RW47a
Ramp (RA)	RA01b, RA02b RA03a, RA04a, RA21a, RA05a, RA06a, RA07a, RA08a, RA05b, RA06b, RA07b, RA08b, RA11a, RA12a, RA09b, RA10b, RA11b,RA12b
Net (NA, NS)	NA01a, NA02a, NS01a, NS02a, NS03a, NS21a, NA04a, NA05a, NS04a, NS05a, NS06a, NS07a, NA08a, NA09a, NS08a, NS09a
Boat (BO)	BO01a
Market (MT) & Target Canvas (TC)	MT01a, MT02a, TC01a, TC02a, MT01b, MT02b, TC01b, TC02b, MT05a, MT06a, MT11a, MT12a
Picnic (PC)	PC01a, PC01b, PC05a, PC06a, PC09a, PC10a
Gymnastics bar (GY)	GY01a
Fireman's pole (FP)	FP01a, FP02a, FP04a, FP05a, FP06a, FP07a, FP23a, FP24a, FP25a, FP26a, FP27a, FP28a
Slides (SL)	SL01a, SL02a, SL03a, SL06a, SL07a, SL08a, SL09a, SL10a, SL11a, SL12a, SL13a, SL26a, SL27a, SL28a, SL29a
Swing (SM)	SW17a, SW21a, SW18a, SW22a, SW19a, SW23a, SW01a, SW05a, SW02a, SW06a, SW03a, SW07a, SW09a, SW13a, SW10a, SW14a, SW11a, SW15a
Climb (CL)	CL17a, CL21a, CL18a, CL22a, CL19a, CL23a, CL01a, CL05a, CL02a, CL06a, CL03a, CL07a, CL09a, CL13a, CL10a, CL14a, CL11a, CL15a
Universal Beam (UB)	UB01a, UB04a, UB02a, UB05a, UB03a, UB06a, UB07a, UB08a
Accessoiries (AC)	AC40a, AC30a, AC31a, AC32a, AC33a, AC01a, AC05a, AC07a, AC03a, AC04a, AC06a, AC23a, AC22a, AC24a, AC21a, AC25a, AC02a, AC09a, AC08a, AC10a

Construction packages

a. Assembly kits for complete climbing frames - Bausätze für komplette Klettergerüste - Kits de construction pour structures d'escalade complètes

Playtowers	401_015, 401_080, 401_125, 402_201, 402_202, 402_204, 402_206, 402_208, 403_202, 403_204, 403_206, 403_208, 403_210, 409_802, 409_804
Swings	401_300, 401_600
Modules	457_005, 457_102, 457_103, 457_106, 457_107, 457_205

b. Assembly packs for climbing frames elements - Baupakete für Klettergerüst-Elemente - Packs de construction pour éléments de structures d'escalade

Sub assemblies	194_002, 194_003, 194_004, 194_006, 194_007, 194_008, 194_009, 194_010, 194_011, 194_100, 194_101, 194_102, 194_103, 194_104, 194_105, 194_107, 194_108, 194_109, 194_110, 194_111, 194_112, 194_113, 194_114, 194_115, 194_116, 194_117, 194_118, 194_119, 194_300, 194_308, 194_312, 194_500, 194_501, 194_508, 194_510, 194_802, 194_804, 194_809, 194_810, 194_811, 194_812

Accessories and components - Zubehör und Komponenten - Accessoires et composants

Slides XL	324_100, 324_200, 324_300, 324_400, 324_500, 324_600
Slides XXL	334_100, 334_200, 334_300, 334_400, 334_500, 334_600
Fireman's pole	201_275
Climbing	201_060, 201_273
Imagination	201_280, 201_285, 201_290, 201_295, 202_473, 450_310, 450_320, 450_330
Swinging	250_001, 250_013, 250_025, 250_034, 250_053
Functional	123_220, 123_222, 123_230, 201_115, 201_220, 201_250, 201_260, 201_270, 202_620, 202_621, 202_622, 202_623, 202_624, 202_625, 202_626, 202_627, 202_628, 202_629, 202_824, 250_060, 250_065, 250_070, 250_075

Manual ID: 040_075_2613

00_01_01_2715_TP_DoC P1 20250523

Applicable EU and UK directives, regulations and standards

General directives

- EU Product Safety Regulation (GPSR 2023/988/EC)
- UK General Product Safety Regulations (GPSRs SI 2005/1803)
- EU Reach Directive 1907/2006
- AfPS GS 2019:01 PAK

Toy directives

- EU Toys Safety Directive (TSD 2009/48/EC)
- UK Toys Safety Regulations 2011 (TSR SI 2011/1881)

Harmonised European and UK toy standard

- Safety of toys (EN 71)
  - Part 1: Mechanical and physical properties (prEN 71-1:2024)
  - Part 2: Flammability (EN 71-2:2020/prA1:2023)
  - Part 3: Migration of certain elements (EN 71-3:2019+A1:2021)
  - Part 8: Activity toys for domestic use (prEN 71-8:2024)

Additional audits

Test reports / Certificate:
Prüfbericht / Zertifikat:
Rapport d´essai / certificate:

TüV Rheinland Product Safety GmbH
Am Grauen Stein, 51105 Köln, Germany
Zertifikat: R 60010766, R 60024578
Prüfbericht: 21115718_003/004/005, 21140630_001/002

Dekra Automobil GmbH
Handwerkstraße 15, 70565 Stuttgart, Germany
Prüfbericht: 340331500_55245585/13-2, 55247432.14-1, 55247432.14-2

Laboratoire National de métrologie et d'essais (LNE)
29 Avenue Roger Hennequin, 78197 Trappes Cedex, France
Revue documentaire: K080196

Design

Product image:
Produktbild:
Image du produit:

Design Code: Z z s F C u

Production date: 04-06-2025

Declaration

This declaration of conformity is issued solely under the responsibility of the manufacturer, who asserts that the aforementioned products comply with the applicable directives and harmonized standards, provided that installation, assembly, and maintenance are performed in accordance with the instructions supplied.

Diese Konformitätserklärung wird ausschließlich unter der Verantwortung des Herstellers ausgestellt, der erklärt, dass die genannten Produkte den geltenden Richtlinien und harmonisierten Standards entsprechen, vorausgesetzt, dass Installation, Montage und Wartung gemäß den bereitgestellten Anweisungen durchgeführt werden.

Cette déclaration de conformité est émise uniquement sous la responsabilité du fabricant, qui affirme que les produits mentionnés ci-dessus sont conformes aux directives applicables et aux normes harmonisées, à condition que l'installation, le montage et l'entretien soient réalisés conformément aux instructions fournies.

Manufacturer details

Jungle Gym B.V.
P.O. Box 75083
1070 AB Amsterdam
Netherlands
www.junglegym.com
info@junglegym.com
+31 85 44 44 100

Jungle Gym
BACKYARD PLAYGROUNDS
since 1988

Amsterdam, December 1st, 2024

On behalf of the manufacturer
Jungle Gym B.V.

Paul Schmit
CEO

Manual ID: 040_075_2613

00_01_01_2715_TP_DoC P2 20250523